FASTBEAM 3

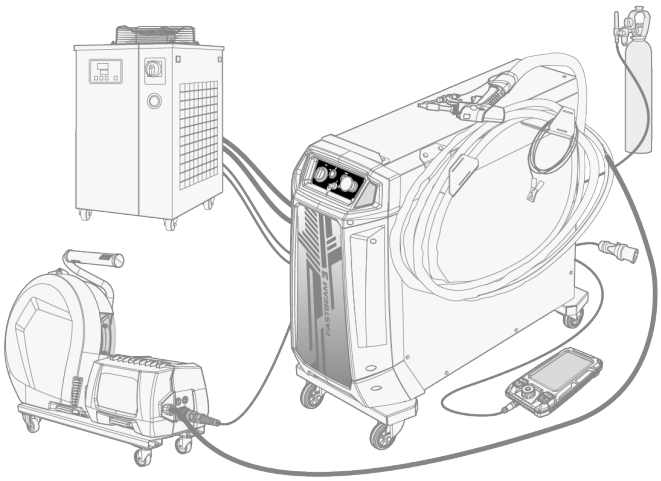

CONTENTS

1. General **4**
1.1 Equipment description 6
1.2 Laser power source 8
1.3 Laser welding torch 11
1.4 Wire feeder 13
1.4.1 Wire spools 14
1.4.2 Wire feed mechanism 15
1.5 Control panel 16
1.6 Cooling unit 17
1.7 Laser-controlled area (LCA) 19
1.8 Optional accessories 20
2. Safety **21**
2.1 Safety functions 26
3. Installation **30**
3.1 Installing power source mains plug 32
3.2 Installing wire feeder with fixed plate (optional) 33
3.3 Installing wire feeder wheels (optional) 35
3.4 Installing and replacing filler wire and wire spool 36
3.5 Installing and replacing feed rolls 40
3.6 Installing and replacing wire guides and wire liner 42
3.7 Connecting cables and hoses 46
3.8 Connecting safety contact cable 49
3.9 Connecting door interlock and signal light 50
3.10 Preparing laser welding torch 52
3.11 Connecting shielding gas supply and testing gas flow 57
4. Operation **58**
4.1 Laser power source status lights 59
4.2 Preparing welding system for use 60
4.2.1 Filling chiller and circulating coolant 62
4.2.2 Focus calibration 63
4.3 Using control pad and parameter adjustments 68
4.3.1 Home view 69
4.3.2 Memory channels 71
4.3.3 Welding parameters 72
4.3.4 Cleaning parameters 76
4.3.5 Weld Assist 78
4.3.6 Device settings 82

4.3.7 Factory reset 84
4.3.8 Logbook 85
4.3.9 Info and status views 86
4.4 Additional guidance to functions and features 88
4.4.1 Laser penetration 88
4.4.2 Laser wobble (oscillation) 89
4.4.3 Laser pulse width modulation 90
4.4.4 USB update 91
4.5 Welding with laser 93
4.6 Cleaning with laser 97
5. Maintenance 100
5.1 Daily, periodic and annual maintenance 101
5.2 Laser welding torch protective lens check and replacement 103
5.3 Troubleshooting 105
5.4 Error codes 107
5.5 Disposal 110
6. Technical data 111
6.1 Laser power source 112
6.2 Wire feeder 113
6.3 Wire feeder consumables 114
6.4 Welding head nozzles 118
6.5 Ordering info 120
7. Appendices 121
7.1 Appendix: Door interlock example 122

1. GENERAL

These instructions describe the use of Kemppi's **FastBeam** handheld fiber laser welding equipment. The system consists of **FastBeam 3** laser welding power source and **CoolFeed 300** wire feeder, both designed for demanding professional use in manual welding (i.e. handheld laser welding). The laser welding torch is integrated to the laser welding power source.

The laser welding system also requires a dedicated cooling unit (chiller).

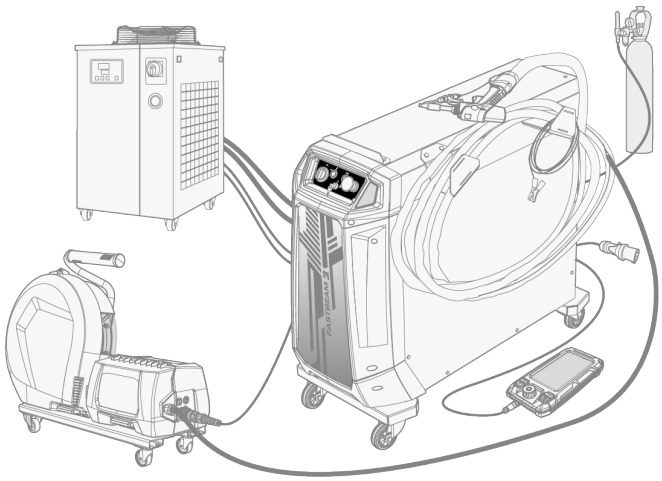

Fully equipped FastBeam laser welding system illustrated. (The shielding gas supply, cooling unit or the mains plug are not automatically included in the standard FastBeam 3 or CoolFeed 300 delivery.)

For more information on the individual FastBeam 3 and CoolFeed 300 devices, refer to the "Equipment description" on page 6 chapter.

Laser welding and operating laser welding equipment require careful attention to the safety prerequisites, as well as professional training. For more detailed safety information, refer to the "Safety" on page 21 chapter.

If you have not yet completed Kemppi's laser welding safety course, you must do so before using the equipment! Contact your Kemppi representative for more information.

Important notes

Read the instructions through carefully.

Items in the manual that require particular attention in order to minimize damage and harm are indicated with the below symbols. Read these sections carefully and follow their instructions.

Note: Gives the user a useful piece of information.

Caution: Describes a situation that may result in damage to the equipment or system.

Warning: Describes a potentially dangerous situation. If not avoided, it will result in personal damage or fatal injury.

DISCLAIMER

While every effort has been made to ensure that the information contained in this guide is accurate and complete, no liability can be accepted for any errors or omissions. Kemppi reserves the right to change the specification of the product described at any time without prior notice. Do not copy, record, reproduce or transmit the contents of this guide without prior permission from Kemppi.

The source language for this document is English. All other language versions available are either professional human translations or advanced machine translations. Any feedback regarding translation terminology can be sent to userdoc@kemppi.com.

1.1 EQUIPMENT DESCRIPTION

The FastBeam product range consists of the FastBeam 3 laser power source designed to be used with the CoolFeed 300 wire feeder. The laser welding system can be used either in a single wire feeder setup or in a dual wire feeder setup. Also welding without the wire feeder is possible.

The FastBeam system incorporates a pendant-like control pad as the main control panel and user interface for setting up the system settings and adjusting the parameters.

The laser welding torch is always integrated to the laser welding power source.

The equipment technical data can be found here: "Technical data" on page 111.

Laser power source:

- FastBeam 3
  >> Laser power source with support for laser welding and cleaning processes
  >> Uses a pendant-like control pad (ControlPad) as the control panel, with touchscreen function
  >> Includes a laser welding torch
  >> Built-in automatic laser welding programs.

For the power source part descriptions, refer to "Laser power source" on page 8.

For the laser welding torch part descriptions, refer to "Laser welding torch" on page 11.

For the control pad description, refer to "Using control pad and parameter adjustments" on page 68.

Wire feeder:

- CoolFeed 300
  >> Maximum wire spool diameter 300 mm
  >> Stackable with FastBeam 3 power source with a dedicated fixed mounting plate

For the wire feeder part descriptions, refer to "Wire feeder" on page 13.

Cooling unit:

The FastBeam laser welding system requires also an external cooling unit (chiller). For more information on the chiller, please refer to the chiller manufacturers documentation. The cooling requirements for the FastBeam equipment can be found in "Cooling unit" on page 17.

For information on optional accessories, refer to "Optional accessories" on page 20 or contact your local Kemppi dealer.

EQUIPMENT IDENTIFICATION

Serial number

Serial number (S/N) of the device is marked on the rating plate or in another distinctive location on the device. It is important to make correct reference to the serial number of the product when ordering spare parts or making repairs for example.

Quick response (QR) code

The serial number and other device-related identification information is saved also in the form of a QR code on the device rating plate or in another distinctive location on the device. The code can be read, for example, by a smartphone camera providing fast access to the device-specific information online.



1.2 LASER POWER SOURCE

This section describes the structure of the FastBeam 3 power source.

Front:

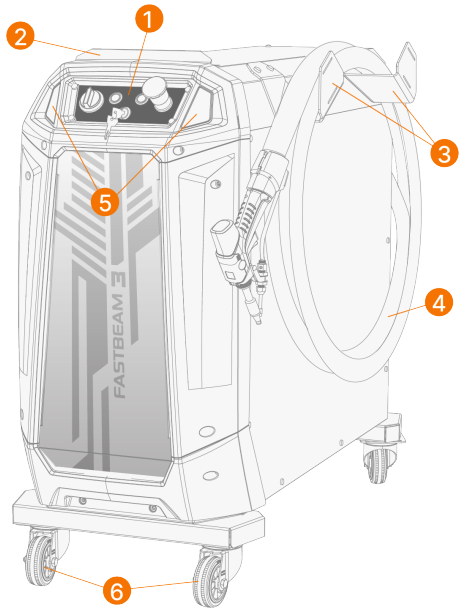

1. Power source panel

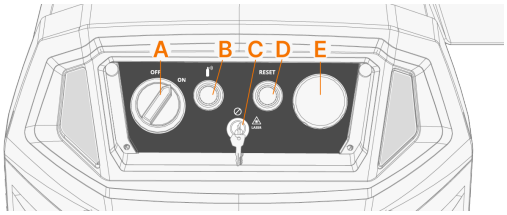

- A) Power on/off switch and indicator
- B) Gas test button
- C) Laser module key switch
- D) Reset button
- E) Emergency stop switch

2. Pull handle
3. Laser welding torch and cable holders
4. Laser welding torch and cable
5. Side LED indicators
6. Front wheels (steering).

Rear:

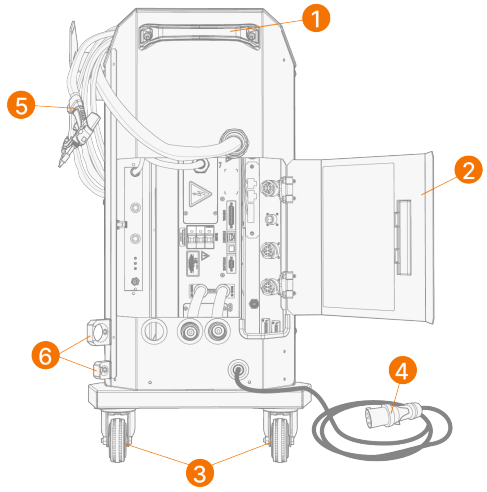

1. Rear pull handle
2. Connector cabinet hatch
3. Rear wheels (steering)
4. Mains cable and plug
5. Laser welding torch
6. Cable holders.

Rear connections/connectors:

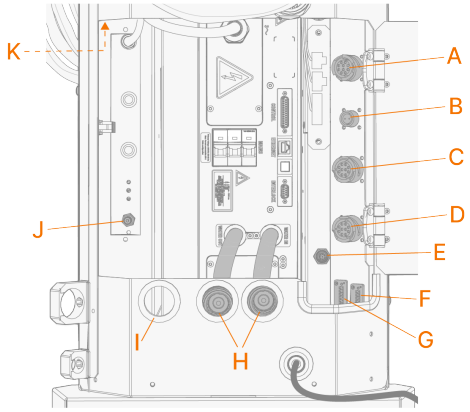

A. Wire feeder
B. Welding safety contact
C. Secondary wire feeder
D. Digital Connectivity Module (DCM)
E. Control pad
F. Door safety contact

The installation of the welding area door safety contact requires a qualified electrician to make the connections.

G. External signal light

The installation of the external signal light requires a qualified electrician to make the connections.

H. Laser module coolant line in/out
I. Aperture for welding torch coolant line hoses
J. Shielding gas inlet
K. Welding torch coolant lines.

1.3 LASER WELDING TORCH

This section describes the structure of the FastBeam 3 laser welding torch.

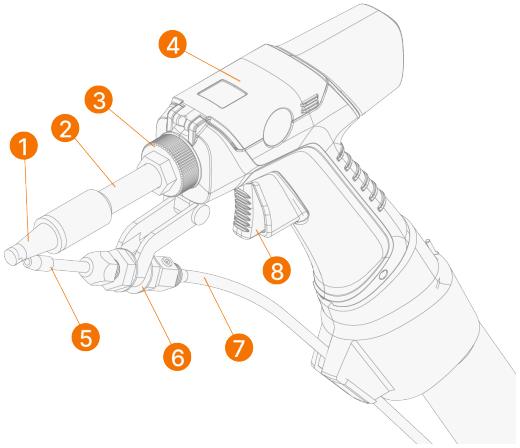

1. Welding nozzle
2. Adjustable neck tube
3. Neck tube locking collar
4. Lens compartment hatch
5. Filler wire guide nozzle
6. Filler wire guide tube and adjustment
7. Wire liner
8. Trigger

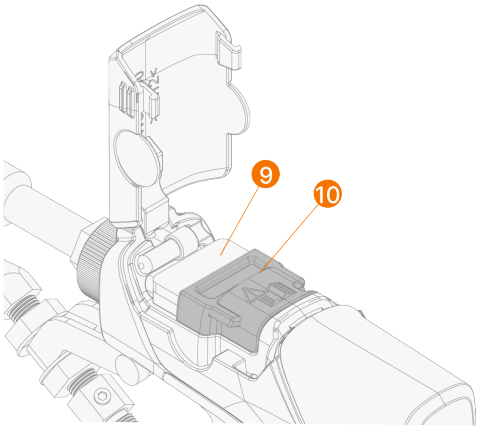

9. Protective lens
10. Focusing lens cover

The lens compartment shall be accessed in a clean and dust-free environment only. The focusing lens is locked in place with an additional lens holder/cover that is secured with a screw. Only authorized and trained professionals may perform maintenance and repairs involving the focusing lens.

Optional trigger guard:

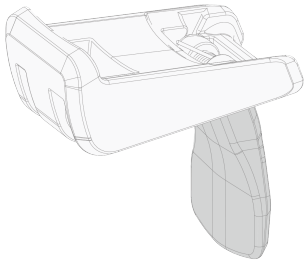

1.4 WIRE FEEDER

This section describes the structure of the CoolFeed 300 wire feeder.

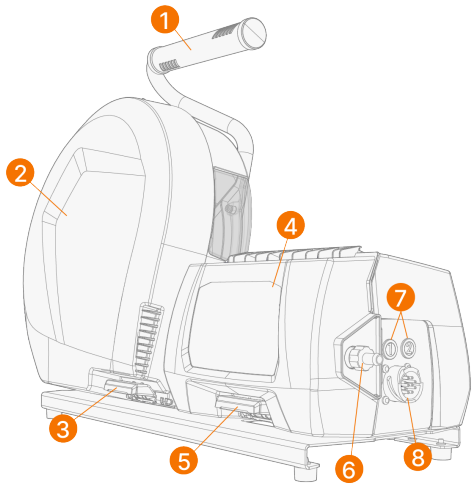

1. Handle
2. Wire spool cabinet door
3. Wire spool cabinet door latch

⚠ *Keep the wire feeder cabinet doors closed during welding to reduce the risk of injury. Keep the cabinet door closed also at other times to keep the inside of the wire feeder clean.*

4. Wire feeder cabinet door
5. Wire feeder cabinet door latch
6. Wire liner connector (filler wire exit)
7. Wire feeder indicator LEDs (wire feeder 1 and wire feeder 2, when applicable)
8. Control cable connector (control cable to/from laser power source)

Inside wire feeder (wire feeder cabinet)

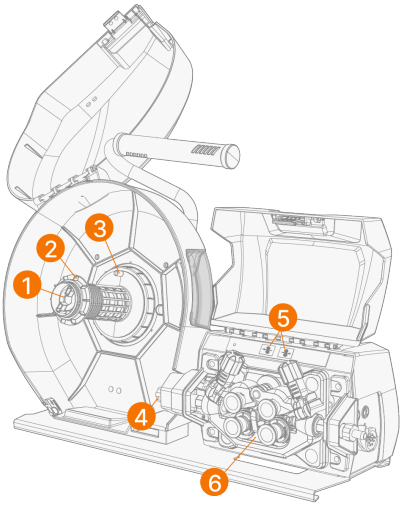

1. Wire spool hub and adjustable spool brake

>> For more information on the wire spool, refer to "Installing and replacing filler wire and wire spool" on page 36.

2. Wire spool fastener
3. Wire spool hub locking pin
   >> For aligning the wire spool and controlling its rotation.
4. Wire inlet
5. Wire inch forward and backward buttons
6. Wire feed mechanism
   >> For more information on the wire feed mechanism, refer to "Wire feed mechanism" on the next page.

1.4.1 WIRE SPOOLS

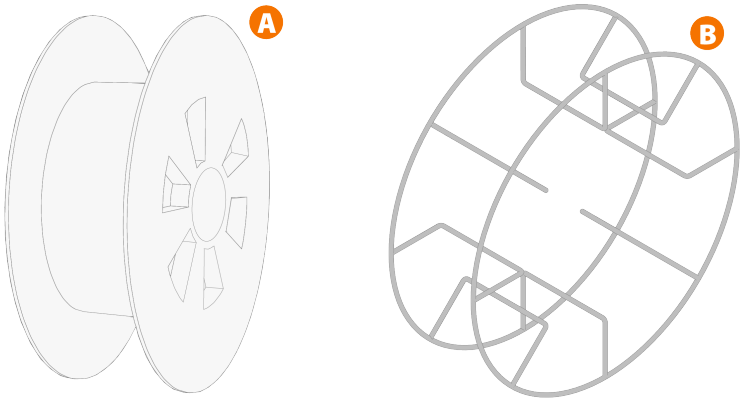

CoolFeed 300 wire feeder uses the standard 300 mm wire spools (A) without additional adapters. Wire spools with a large center hole, e.g. a wire basket rim (B), require an additional spool adapter (available as Kemppi accessory):

When installed, the pin next to the wire spool hub in the wire feeder must align and go into the hole in the spool or spool adapter.

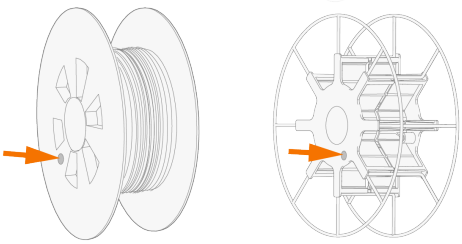

For installing the filler wire and wire spool, refer to "Installing and replacing filler wire and wire spool" on page 36.

1.4.2 WIRE FEED MECHANISM

CoolFeed 300 wire feeder's wire feed mechanism:

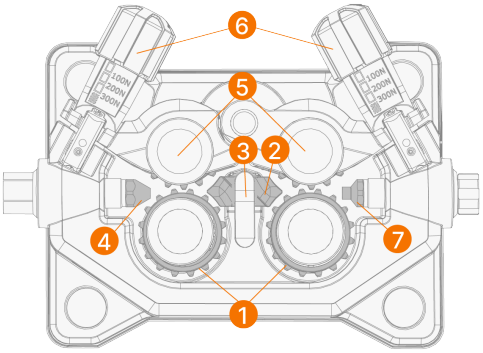

1. Drive feed rolls and drive feed roll securing caps
2. Middle guide tube ("prism")
3. Middle guide tube securing clip
4. Inlet guide tube
5. Pressure feed rolls and pressure feed roll mounting pins
6. Pressure feed roll locking arms
7. Outlet guide tube.

For replacing the wire feed rolls, refer to "Installing and replacing feed rolls" on page 40.

For replacing the wire guide tubes, refer to "Installing and replacing wire guides and wire liner" on page 42.

1.5 CONTROL PANEL

This section describes the FastBeam system's control panel, ControlPad. The ControlPad device connected to the laser power source is the system's main control panel.

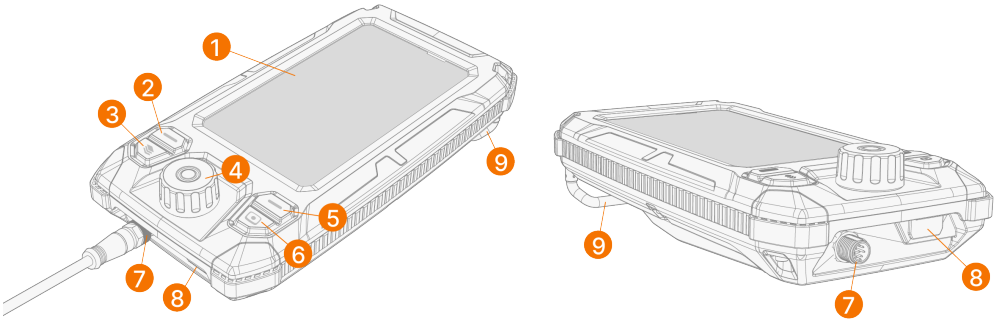

1. Touchscreen
   >> ControlPad can be user either with the physical buttons or with the touchscreen's touch function.
2. Left selection button
   >> Selection/function is shown in the bottom-left corner of the display.
3. View menu button
   >> Long-press returns to the home view.
4. Control knob with push-button function
5. Right selection button
   >> Selection/function is shown in the bottom-right corner of the display.
6. Memory channel button
   >> Long-press saves the adjusted welding parameters on the memory channel currently in use.
7. Control cable and connector
8. USB-A connector (behind rubber cover)

The USB connector is intended only for updating the system using a dedicated USB memory stick.

9. Hanger bracket.

1.6 COOLING UNIT

Kemppi does not manufacture cooling units for laser welding equipment. Contact your Kemppi representative for more information and options. It is recommended to use only the cooling units recommended for the FastBeam 3 equipment by Kemppi.

The FastBeam laser welding system requires a dedicated cooling unit (chiller) connected to the inlet and outlet cooling liquid lines on the laser power source. The laser module and the laser welding torch have their own separate cooling loops (inlets and outlets).

This section describes the requirements for the chiller equipment. The cooling system must meet these requirements, otherwise the laser welding equipment will not operate at rated power or as intended.

Coolant

The following coolant requirements for the equipment cooling must be met:

Parameter	Value
Cooling liquid	Distilled water (or Kemppi cooling liquid MGP 4456*)
Conductivity	0.1 ... 800 µS/cm
Particle diameter	< 100 µm
pH	7.0 ... 8.5
Inhibitors	Optional, depending on use. If Kemppi cooling liquid is used, additional inhibitors are not normally required if the cooling unit has a filter and it is cleaned regularly. The cooling water/liquid is recommended to be replaced every three months.

** Mixed with distilled water to 25...30% propylene-glycol concentration (approx. 1.5 parts of Kemppi cooling liquid MGP 4456 and 1 part of distilled water).*

Refer to "Filling chiller and circulating coolant" on page 62 for more information on using the coolant.

Cooling loop 1 (laser module)

The following chiller requirements for the laser module cooling must be met:

Parameter	Value
Recommended cooling capacity	6 kW
Cooling water temperature	20...30 °C
Minimum flow rate	18 l/min
Maximum pressure	6 bar
Pressure drop	< 3 bar

Cooling loop 2 (laser welding torch, fiber optic cable)

The following chiller requirements for the laser welding torch and fiber optic cooling must be met:

Parameter	Value
Flow rate	1.5 ... 3 l/min
Maximum pressure	6 bar
Pressure drop	1 bar (@ 2.0 l/min)
Inlet temperature	5...45 °C
Water hardness (CaCO3)	< 250 mg/l

Water pH	7.0 ... 8.5
Particle size	< 200 µm

Cooling circuit materials

The following materials are allowed in the cooling circuit:

- Copper
- Brass
- Stainless steel (SUS 304, SUS 316)
- Plastics: Polyurethane (PUR), rubber (EPDM), epoxy, polyamide (PA), polyoxymethylene (POM), polyethylene (PE).

This applies to any component that is in contact with the coolant in the coolant system.

1.7 LASER-CONTROLLED AREA (LCA)

Kemppi does not provide or manufacture equipment for establishing a laser-controlled area (LCA). This chapter describes Kemppi's recommendations and requirements for the LCA.

Areas with direct or indirect laser radiation must be clearly separated from other areas with appropriate walls and barriers consisting of fire-resistant and non-reflective materials. A purpose-made ventilated laser welding cabin/booth with a closed roof is the recommended option.

If the cabin/booth does not have a roof, special attention must be paid into what is above the welding area. E.g. bare ventilation pipes in the premises pose a potential reflection hazard which must be addressed by covering or painting them with non-reflecive coating. Also, the users must be made aware of this risk.

Personnel entering the LCA must be orientated and made aware of the dangers related to lasers.

The laser welding area must be marked with clear signs. At least the following safety topics are to be addressed:

- No unauthorized personnel or persons allowed.
- Warning of laser radiation.
- Personal protective equipment requirements.
- Operational status (signal lights).

The laser welding equipment includes connections for door interlock as well as for external signal light. Use them in accordance with your local laser-controlled area's safety requirements and design.

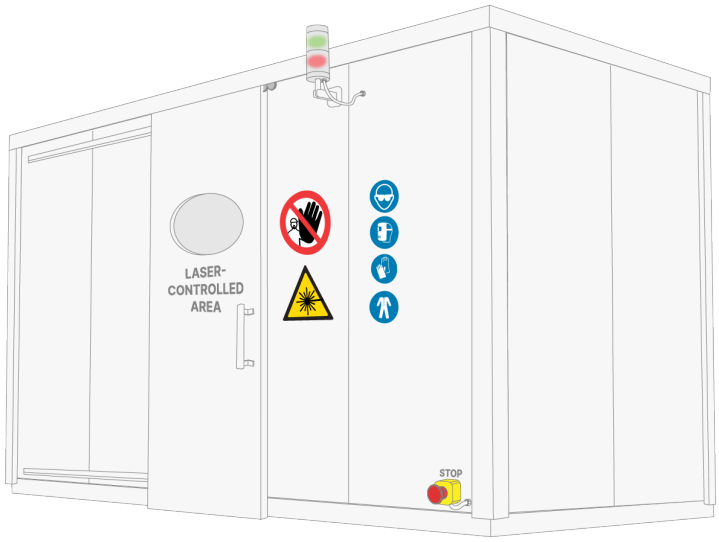

This example illustration of a laser-controlled area (cabin) is for informational reference purposes only.

If possible, the cooling unit (chiller) is recommended to be positioned outside the welding area, also in a well-ventilated spot.

1.8 OPTIONAL ACCESSORIES

For installing the optional accessories, refer also to the installation instructions delivered with the equipment. Read also the installation chapters here: "Installation" on page 30.

CoolFeed 300 cart:

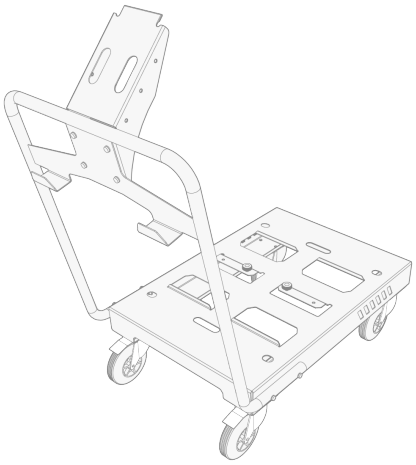

For more information on optional accessories, contact your local Kemppi dealer.

2. SAFETY

For your safety and that of your work environment, read and understand all operating and safety instructions before using laser welding equipment. Note that welding is always classified as hot work.

This equipment is a **Class 4** laser product that can generate reflected or scattered radiation, leading to personal injury or fire hazards. The use of laser welding equipment require careful safety considerations. In addition to common welding safety practices, laser welding requires a dedicated laser-controlled area (LCA) and appropriate training in laser welding and safety.

The welding equipment mentioned in this manual is intended for professional use in an industrial environment. Due to the laser safety requirements, the equipment is not suitable for use in exposed outdoor environments. **The equipment may be installed, operated, maintained or repaired by authorized and trained professional personnel only.**

Do not use the equipment for any purpose other than described in the operating and safety instructions.

Standards

This laser welding equipment conforms and/or adheres to the following international standards:

- EN ISO 11553-2 Safety of machinery — Laser processing machines — Part 2: Safety requirements for hand-held laser processing devices
- EN 60825-1+A11+AC Safety of Laser Products – Part 1: Equipment classification and requirements
- EN 60204-1 Safety of machinery – Electrical equipment of machines – Part 1: General requirements
- EN ISO 13849-1 Safety of machinery – Safety-related parts of control systems – Part 1: General principles for design
- Functional Safety, Category 3 safety-level protection system
- EN ISO 12100 Safety of machinery – General principles for design – Risk assessment and risk reduction
- EN IEC 61000-3-11 Electromagnetic compatibility (EMC) – Part 3-11: Limits – Limitation of voltage changes, voltage fluctuations and flicker in public low-voltage supply systems – Equipment with rated current ≤ 75 A and subject to conditional connection
- EN 61000-3-12+A1 Electromagnetic compatibility (EMC) – Part 3-12: Limits – Limits for harmonic currents produced by equipment connected to public low-voltage systems with input current > 16 A and ≤ 75 A per phase
- EN IEC 61000-6-2 Electromagnetic Compatibility (EMC), Generic standards – Immunity for industrial environments
- EN IEC 61000-6-4 Electromagnetic Compatibility (EMC), Generic standards – Emission standard for industrial environments.

Safety system

This laser welding system is equipped with a safety protection system comprising a door interlock, emergency stop, laser lock key switch, and a welding torch safety contact interlock. The welding torch also has temperature sensors to detect excessive heat caused by malfunction. These are designed to ensure rapid cutoff of hazardous energy under abnormal conditions.

The welding torch safety contact includes an additional safety layer with a time limit. If the welding is not started within the set time frame, the safety contact expires and the welding torch contact with the workpiece must be re-established.

Safety warnings

	Read instructions	Before using the laser welding equipment, read and understand all operating and safety instructions for the equipment.

 	Wear laser safety goggles and mask	Always wear both, laser safety goggles and laser welding mask (face shield) when using the equipment. Exposure to direct laser radiation can inflict retina and/or cornea injuries leading to permanent eye damage. Laser welding mask protects the face from the reflected and scattered laser beam, ultraviolet light, heat and spatter.
	Prevent skin exposure to direct laser radiation	Direct laser radiation can lead to serious skin burns. Always wear personal protective equipment, including heat protective gloves and clothing.
 	Prevent exposure to reflected laser beam	Highly reflective metals (such as aluminum and copper) may reflect the laser beam and may cause hazard to persons in the surrounding area. Any spectators must be located behind the welder and wear personal protective equipment.
	Use protective device	Laser is harmful to human body. Some protective devices (such as materials which can absorb laser and have resistance to heat and radiation) can be used for preventing laser scattering.
	Establish a laser-controlled area	A special laser welding area must be established (separated from other working areas with e.g. appropriate walls and barriers, using fire-resistant and non-reflective material), and the welding area must be marked with clear signs. Access of unauthorized personnel must be prevented.
	No unauthorized access	Access to the laser welding area by unauthorized personnel must be prohibited.
	Do not touch the hot workpiece	The workpiece is potentially hot during welding and immediately after welding.
	Keep the equipment grounded	The equipment must be grounded for electrical safety.
	Do not spray the welding machine with water jets	If water enters the welding machine, it may cause damage to the equipment.
 	Keep the welding machine and laser beam away from flammable materials	Do not direct the laser beam at flammable materials as it may cause a fire hazard. Flammable materials may also ignite from welding spatter.
	People carrying cardiac pacemakers should not approach the welding machine	Unless otherwise permitted by doctor, the persons carrying cardiac pacemakers should not approach the welding machine at working status or have activity around the welding machine.

	Place the welding machine horizontally and safely	Personal injury or machine damage may occur if the welding machine falls down.
	Do not prevent air circulation in the machine vicinity	Blocking the air circulation might cause cooling or overheating issues.
	Arrange fire extinguisher near the laser welding machine	Place the fire extinguisher in a safe position in the laser welding area.
	Regular maintenance	The welding machine should undergo regular maintenance to prevent potential hazards. Only trained professionals with proper safety equipment may perform maintenance and repairs.
	Welding fume exposure	Equip work areas with fume extraction. Wear masks during welding. Conduct occupational health checks periodically.

General safety

- Do not look at or touch the laser beam (even when wearing laser safety goggles). Protect the eyes and skin from the equipment's output laser beam as it may cause blindness and skin burns!
- Laser welding produces fumes that can be hazardous to health. Proper fume extraction (local exhaust ventilation) and personal protective equipment are always required.
- Weld only in well-ventilated areas.
- The equipment may be installed, operated, maintained or repaired by authorized and trained professional personnel only.
- Provide training for operators on laser welding safety and production process safety.
- Use only the cables delivered with the equipment (or specified for the equipment). Electrical wires and cables with insufficient capacity or improper wiring may lead to fire hazard or electric shock.
- The power supply must be provided with protective earth and neutral conductors. It is the responsibility of the installer or user of the device to ensure that there are no faults or electrical leaks that could cause an electric shock.
- Use caution if wearing medical devices. The welding equipment may generate a magnetic field and affect the proper functioning of medical implants, such as a pacemaker. Persons with a pacemaker should not be in the near proximity of the welding machine unless specifically authorized by a doctor.
- Do not use the laser welding equipment for any purpose other than welding or cleaning metal.
- If any faults occur, stop using the equipment immediately, press the emergency stop and turn off the power. If you sense a burning smell or if the device overheats, emits smoke, or starts making sounds that are out of the ordinary, turn off the power immediately, as there is a risk of electric shock or fire. Contact your local dealer or service partner for any repairs.

Laser-controlled area

Establish a laser-controlled area (LCA). A purpose-made ventilated laser welding cabin/booth with a closed roof is recommended to be used.

- Areas with direct or indirect laser radiation must be clearly separated from other areas.
- A special laser welding area must be established (separated from other working areas with e.g. appropriate walls and barriers, by fire-resistant and non-reflective material) and the welding area marked with clear signs.
- A safety warning must be posted to prevent access by unauthorized personnel.

- The equipment includes connections for door interlock as well as for external signal light. Use them in accordance with your local laser-controlled area's safety requirements and design.

Laser safety notifications

The laser welding equipment is designed to have an enclosed laser path which can prevent leakage of laser radiation effectively. The equipment's operational precautions are as follows:

- Never point the laser welding torch (laser outlet) towards the human body, the eyes, or flammable materials when the power is on.
- Do not add or remove any parts while the equipment is running. Keep the welding system covers closed during operation.
- Make sure to wear laser safety goggles, laser welding mask and heat protective gloves during laser processing.
- Do not damage the optical laser fiber cables. Do not step on, stretch or twist the cables. Any cable damage may lead to laser radiation and fire hazard.
- If the laser fiber cables are damaged, the unit alarms and the safety interlock activates.
- Use heat-resistant laser absorbers and diffusers to prevent laser leakage during maintenance. Do not touch parts unrelated to the maintenance operation. Only trained professionals with proper safety equipment may perform maintenance.

Electrical safety notifications

- Only certified electricians may perform wiring. Wait for 5 minutes (capacitor discharge) before connecting/debugging. Before powering on, verify proper grounding and ensure that all enclosures/lids are closed.
- Do not damage the power cable or connection cables. Do not step on, stretch or twist the cables. Any cable damage may lead to electric shock, short circuit and fire hazard.
- Do not let any thin objects (e.g. metal wires) intrude into the equipment, especially metal or conductive materials. They might cause a short circuit or other failure.
- Do not use the equipment in humid places, as there is a risk of electric shock or a short circuit.
- Power off the equipment when not using it.

Fire safety notifications

- Pay attention to fire safety. Keep a fire extinguisher near the welding machine for safety.
- Do not stack flammable materials, explosives or any other objects that aren't directly related to the welding operation around the equipment as this poses a fire hazard.
- Do not place flammable materials or explosives on the optical path or within the laser beam's exposure area. There is a risk of a fire hazard or explosion if flammable materials or explosives are exposed to the laser beam.
- The welding machine heats up during welding. Do not cover the welding machine with textiles, such as carpet or cloth, during or shortly after welding as this causes a fire hazard.
- If a fire or explosion occurs in the equipment, turn off all power supplies and put out the fire with a fire extinguisher. Follow also your local emergency response and fire safety procedures.
- Note that process gases, such as oxygen, can increase the risk of fire.

Operational requirements

In conjunction with all of the above-mentioned safety notifications and warnings, also the following operational requirements must be taken into account.

- Instructors, supervisors and operators must be trained professionals.
  >> Personnel must have the necessary knowledge and experience about laser welding, laser welding equipment and related safety requirements.
- Users of laser equipment and all other workers in the area shall be informed about the equipment and the need for personal protective equipment (PPE).
- Ensure protection of skin and eyes against laser radiation with suitable personal protective equipment and fire-safe clothing (eye protection alone is not sufficient).

- Especially, if welding with other processes and devices (e.g. MIG or TIG) takes place in the same premises, pay special attention to the correct personal protective equipment when switching or moving between stations. E.g., only purpose-made laser safety goggles and masks provide eye protection against laser radiation.
- Wear gloves when touching the workpiece after finishing work, as the workpiece will still be hot.
- Install the equipment firmly on a horizontal surface. If the welding machine falls over, it can cause personal injury or damage to the machine.
- The ambient conditions (temperature range and maximum humidity) specified on the equipment's rating plate and in the technical specifications must be complied with. It is forbidden to use the equipment in places where there is:
  >> dust and oil dirt
  >> vibration
  >> corrosion
  >> electromagnetic interference
  >> humidity
  >> high levels of carbon, nitrogen or sulphur oxides in the air.
- Ensure that the cooling capacity of the water cooling system meets the requirements and can effectively cool the laser welding equipment. Insufficient cooling may cause equipment shutdown or malfunction.
- Avoid significant fluctuations in the ambient temperature. Water vapor forms (condenses) on the module or lens if there are major changes in the ambient temperature, which may affect the operation of the equipment. When water vapor forms, let the equipment warm up before start-up.
- Do not use the laser welding equipment at ambient temperatures below +5 °C. If the temperature drops below +5 °C, drain the cooling system.
- Wipe off any dirt or water on the equipment's casing with a dry or wet cloth. If necessary, clean the equipment with neutral detergent or alcohol. Do not use gasoline or paint thinner.
- Perform regular maintenance. The welding equipment must be maintained regularly to ensure safe and proper functioning of the device.
- Power off and lock the machine before connecting cables.
- Power off and lock the machine before performing maintenance and debugging operations. Only trained professionals with proper safety equipment may perform these operations!
- Do not bend the optical laser fiber cable below its minimum bending radius of 300 mm.

https://kemp.cc/safety/laser

2.1 SAFETY FUNCTIONS

FastBeam 3 includes a safety circuit board that controls two independent interlock channels with a number of safety features. This chapter describes those features.

In the below descriptions, term "laser operation" refers to both, welding with laser and cleaning with laser.

Door interlock (safety board end)

Safety function performance level: PL d

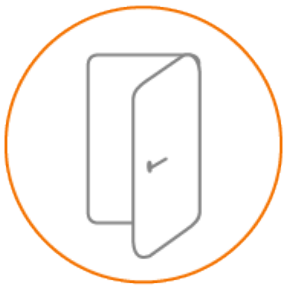

Only an authorized electrician is allowed to install the connector wiring.

*Review and verify your laser-controlled area's setup and connections for the door sensor. The door sensor(s) have to be connected through an additional safety relay. The FastBeam 3 door interlock safety function is compatible with **PL d, Cat 3 safety relays with two normally open (NO) contacts** that operate simultaneously.*

The door interlock safety function involves two contact pairs. When both of the contact pairs are closed, the door to the laser-controlled area is interpret to be closed and the safety function allows laser operation. When both contact pairs are open, the door is interpret to be open and the laser operation is prohibited.

If one contact pair is closed and the other one open for more than 100 ms, the safety function interprets the door sensor or its connection faulty and prohibits laser operation.

Example of a functioning door interlock installation can be found here: "Appendix: Door interlock example" on page 122.

Key switch

Safety function performance level: PL d



The key switch in the laser power source's front panel uses two channels and two contact pairs. In passive state (locked), the other contact pair is open and the other closed. The laser operation is prohibited.

When the key switch is turned, the contact pair that was open, closes, and the one that was closed, opens. This is the unlocked state, and the laser operation is allowed by this safety function.

If both of the contact pairs are in the same state for over 100 ms, the safety function detects an error and prohibits laser operation. This error may occur if there is, for example, a mechanical fault with the key switch.

Emergency stop button

Safety function performance level: PL d



The emergency stop button in the laser power source's front panel involves two isolated contact pairs. In normal operation state, they are closed, and in an emergency state (pressed), they are open.

If one contact pair is closed and the other one open for more than 100 ms, the safety function interprets the emergency stop button faulty and prohibits laser operation.

When the emergency stop has been engaged (both contact pairs open) and then disengaged (both contact pairs closed), continuing normal operation requires pressing the separate reset button in the laser power source's front panel.

Laser welding torch mirror optics temperature control (NTC)

Safety function performance level: PL d



The laser welding torch's mirror optics temperature control is implemented using two NTC resistors connected to the safety board. This allows the detection of conductor breakage or short-circuiting in any of the resistor and conductor combinations.

If the mirror optics temperature exceeds the predefined limits (i.e. minimum and maximum values), even with just one NTC resistor, the laser is shut off.

Trigger event control and welding torch safety contact

Safety function performance level: PL d



The trigger safety feature consists of two contacts that are open in normal state, and the laser operation is not allowed. When the contacts are closed (i.e. the trigger is pressed), the laser operation is allowed and started if all of the other safety features are in the allowed state:

- Door is shut
- Key switch is turned on
- Emergency stop button is not pressed
- Mirror optics temperature is within limits
- Welding torch tip's contact to the workpiece has been established within the previous approx. 5 seconds.



The welding torch safety contact detects the welding torch tip's (nozzle) contact to the workpiece. In order to be able to detect the contact, the separate safety contact cable must be connected to the workpiece.

In the normal state, the contact is open (i.e. no contact), and the laser operation is not allowed. When the welding torch tip touches the workpiece, the contact is established and the safety contact feature allows to start the laser operation within approximately 5 seconds.

If the welding is not started in the given time frame, the safety feature requires re-establishing the contact (i.e. by detaching the welding torch tip from the workpiece and establishing the contact again).

When establishing the contact to the workpiece, the welding torch trigger must be released.

If the contact with the workpiece is lost during laser operation, the safety feature shuts off the laser.

When the door has been opened and closed during laser operation: The safety feature is activated. The safety system does not prevent continuing the laser operation, but the laser operation is not allowed to continue automatically. To continue laser operation, the trigger must be released and the welding torch tip's contact to the workpiece must be re-established.

When the contact between the welding torch tip and the workpiece has been lost: The safety feature is activated. To continue laser operation, the trigger must be released and the welding torch tip's contact to the workpiece must be re-established.

The key switch is turned off during laser operation: The laser operation is stopped. When it is turned back on, the laser operation can be resumed following the normal starting sequence.

When the equipment is turned on (or after a power cut): Starting the laser operation requires pressing the reset button on the laser power source's front panel, in addition to all the other safety features being in the allowed state.

In addition to the safety circuit board functions described in this chapter, the laser module internally monitors the laser's functioning. Refer also to the error situations in "Error codes" on page 107.

3. INSTALLATION

Do not connect the equipment to the mains before the installation is complete.

Do not modify the welding equipment in any way, except for the changes and adjustments covered in the manufacturer's instructions.

Do not attempt to move or hang the equipment mechanically (e.g. with a hoist) from the handle on the power source unit or on the wire feeder unit. The handles are for manual moving only.

Place the machine on a horizontal, stable and clean ground. The equipment should be installed on a horizontal and stable surface (e.g. concrete), with a surface flatness tolerance of ±10 mm.

Protect the machine from rain and direct sunshine. Check that there is enough space for cooling air circulation in the machine vicinity.

When the equipment is being transported, the cooling system must be completely drained.

Unloading and moving

Confirm the equipment weight. Assign a dedicated supervisor and plan the lifting and moving operation carefully according to the site-specific requirements.

The FastBeam 3 laser welding power source is equipped with wheels for moving the device on a level surface.

During unloading and moving, make sure the equipment is kept in a straight upright position, with the tilt angle not greater than ±10° to ensure smooth unloading.

Check also the packaging for more information and unloading instructions.

Before installation

Make sure to acknowledge and follow the local and national requirements regarding installation and use of high voltage units and laser equipment. Read and understand all the related safety instructions and safety requirements.

Check the contents of the packages and make sure the parts are not damaged.

Before you install the power source on site, check the requirements for the mains cable type and fuse rating.

Establish a dedicated work area for laser welding, i.e. a laser-controlled area (LCA).

Before commissioning

Prior to equipment commissioning, as applicable, the following external devices need to be additionally configured:

- Door interlock: Safety relay, magnetic encoder sensor and external power supply (customer-supplied)
  >> If this is not configured, the equipment cannot start.
- External signal light (customer-supplied)
  >> This is optional, depending on the laser-controlled area's setup.

Use these safety features according to your local laser-controlled area's safety requirements and design. If these safety features are bypassed, the user shall bear full responsibility for any resulting safety issues.

Note also that the Kemppi's laser welding safety course must be completed.

Distribution network

This Class A equipment is not intended for use in residential locations where the electrical power is provided by the public low-voltage supply system. There can be potential difficulties in ensuring electromagnetic compatibility in those locations, due to conducted as well as radiated radio-frequency disturbances.

Provided that the short circuit power of public low voltage system at the point of common coupling is higher than mentioned in the table below (*), the equipment is compliant with IEC 61000-3-11:2017 and IEC 61000-3-12:2011 and can be connected to public low voltage systems. It is the responsibility of the installer or user of the equipment to ensure, by consultation with the distribution network operator if necessary, that the system impedance complies with the impedance restrictions.

Equipment	*
FastBeam 3	1.2 MVA

3.1 INSTALLING POWER SOURCE MAINS PLUG

Only an authorized electrician is allowed to install the mains cable and plug.

Only connect the laser welding machine to an earthed electric network.

Do not connect the laser welding machine to the mains before the installation is complete.

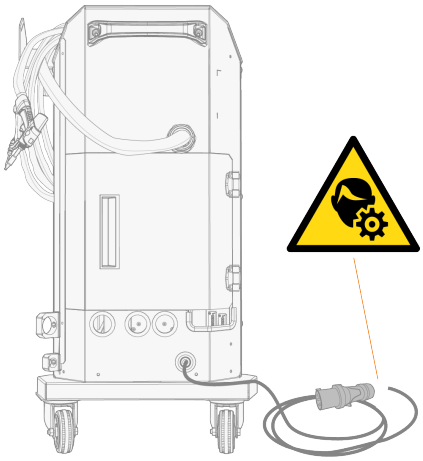

Install the 3-phase plug according to the laser power source and site requirements. Refer also to "Technical data" on page 111 for more technical specifications.

Mains connection type and fuse rating requirements:

- Mains connection: 3-phase, 380...415 V (±10%), 50/60 Hz.
- Mains connection cable type: H07RN-F, 5G, 2.5 mm^2.

The mains cable includes the following wires:

1. Brown: Phase L1
2. Black: Phase L2
3. Grey: Phase L3
4. Blue: Neutral (N)
5. Yellow-green: Protective earth (PE).

3.2 INSTALLING WIRE FEEDER WITH FIXED PLATE (OPTIONAL)

This section describes the installation of CoolFeed 300 wire feeder on top of the FastBeam 3 laser power source with the fixed mounting plate.

Tools needed:



1. Install the fixed wire feeder mounting plate on the power source.
   >> Place the mounting plate on the power source so that it aligns in the grooves.
   >> Secure the mounting plate in place with the four screws on the left side (looking from the front of the power source).
   >> If already installed on the plate, remove the wire feeder retaining screw temporarily.

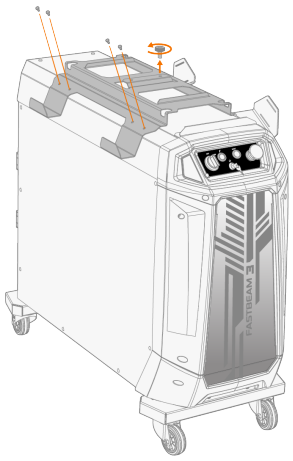

2. Lift the wire feeder on top of the fixed mounting plate so that the four wire feeder foot pads (one in each corner on the wire feeder bottom) go into the slots in the mounting plate.
   >> Secure the wire feeder in place with the retaining screw in the middle.



3.3 INSTALLING WIRE FEEDER WHEELS (OPTIONAL)

This section describes the installation of the optional wheel assemblies on the CoolFeed 300 wire feeder.

Tools needed:



T25

1. Remove the four foot pads from the wire feeder bottom. The foot pads are fixed with a screw.

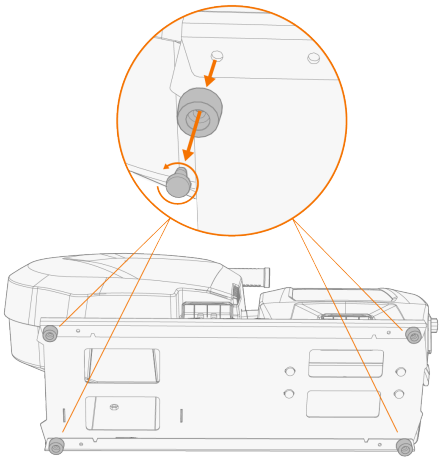

2. Install the turning wheel pair in the front and the fixed wheel pair in the back. Fix with the screws provided with the wheel sets.

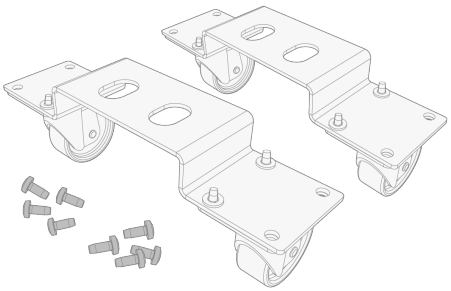

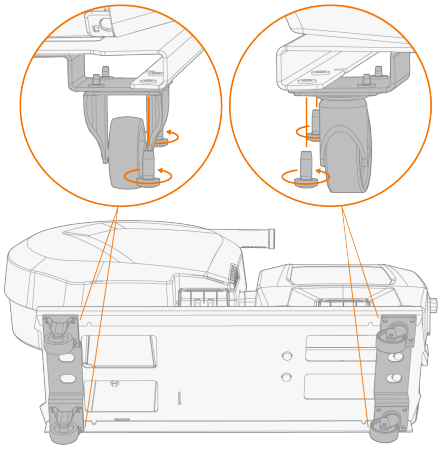

3.4 INSTALLING AND REPLACING FILLER WIRE AND WIRE SPOOL

This section describes how to install the filler wire and spool on CoolFeed 300 wire feeder.

Install the wire liner to the wire feeder before installing the wire spool.

When changing the wire spool, remove the remaining filler wire from the laser welding torch and wire feed mechanism before removing the wire spool.

Always ensure that the wire liner and feed rolls are suitable for the filler wire (diameter and material) in question. Refer also to "Installing and replacing feed rolls" on page 40.

To install the wire spool:

1. Open the wire feed cabinet door.
2. Insert the wire spool onto the spool hub and push the spool into the wire feeder.
3. Secure the wire spool in place by tightening the fastening collar on the spool hub.

Ensure that the wire spool is facing the right direction, the filler wire running from the bottom of the spool to the feed rolls.

When installed, the pin next to the wire spool hub in the wire feeder must align and go into the hole in the spool or spool adapter.

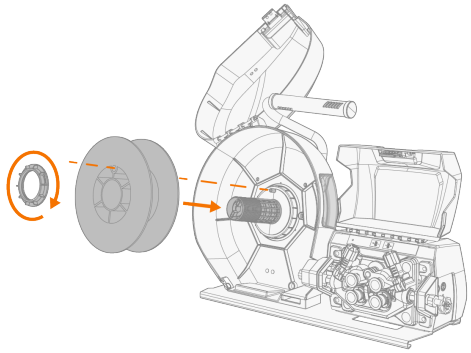

4. If needed, adjust the spool's brake force by turning the tightening lever in the center of the spool hub.

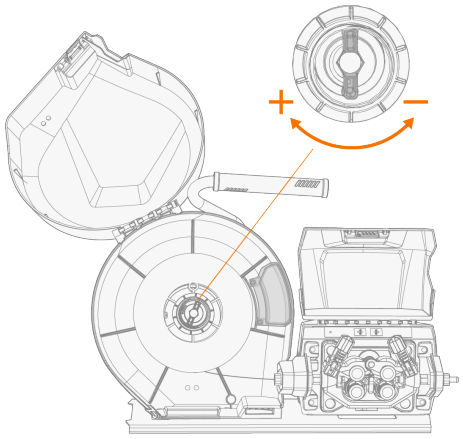

The load applied varies depending on the size and weight of the filler wire and spool, but also the filler wire feed speed. The heavier the wire spool and the faster the wire feed speed, the greater the need to increase the braking load. Adjust the pressure, set the wire feed speed and check that the braking force is enough to ensure the filler wire does not spill from the spool on overrun.

To install the filler wire:

1. Release the filler wire end from the spool and cut off any deformed section so that the end is straight.

Ensure that the filler wire does not spill from the spool when it is released.

2. File the tip of the filler wire smooth.

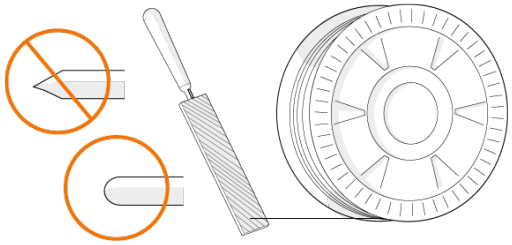

Sharp edges on the filler wire tip may damage the wire liner.

3. Release the pressure roll locking arms to move the feed rolls apart.

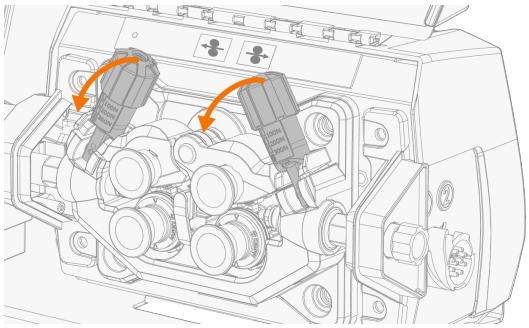

4. Guide the filler wire through inlet tube, middle wire guide tube (prism) and outlet tube.

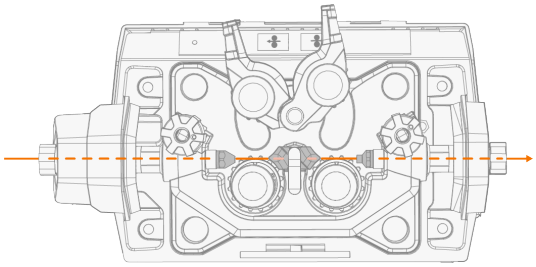

5. Push the filler wire by hand towards the laser welding torch so that the wire goes into the wire liner (approx. 20 cm).

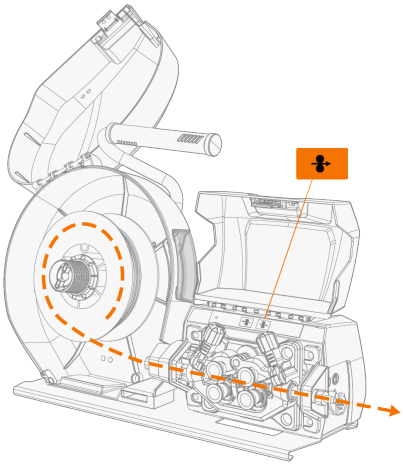

6. Close the pressure roll locking arms so that the filler wire is locked between the feed rolls. Ensure that the filler wire sits in the feed roll grooves.

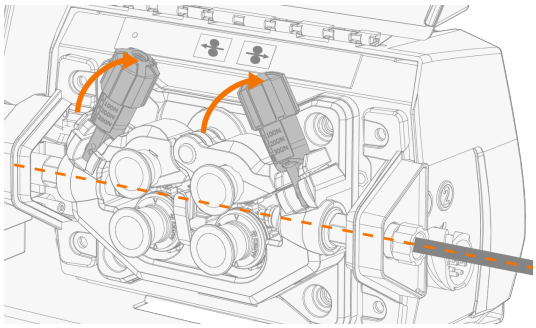

7. Adjust the pressure of the feed rolls by turning the pressure roll locking arm knobs.

   >> The markings on the pressure roll locking arms indicate the pressure applied. Refer to the information sticker on the wire feeder lid or to the table below for the tightening specifications.

⚠ *Apply even pressure on both pressure arms / feed rolls.*

⚠ *Excessive pressure may cause damage to the filler wire (especially aluminum filler wire) and impede the feeding of the filler wire. Excessive pressure also increases the wire feed mechanism load.*

Filler wire material	Feed roll profile	Diameter (mm)	Adjustment (x 100 N)

Fe/Ss solid	V	≤ 1.0	1.5 ... 2.0
		≥ 1.2	2.0 ... 2.5
Aluminum	U	1.2	1.0 ... 1.5
		≥ 1.4	1.5 ... 2.0

8. Close the wire spool cabinet.
9. Press the wire inch forward button to drive the filler wire into the laser welding torch's wire liner. Stop when the wire reaches the laser welding torch's wire nozzle.

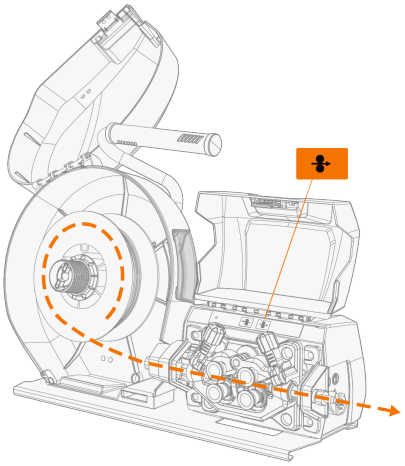

Watch out for the wire when it reaches the wire guide tip and exits the welding torch.

10. Close the wire feed mechanism cabinet.

Before welding, ensure that the welding parameters and settings on the control panel conform to your welding setup.

>> Refer to "Using control pad and parameter adjustments" on page 68 for more information.

To remove the wire spool:

1. Pull the filler wire from the welding torch and from the wire liner by winding it back on the wire spool.
2. Remove the fastening collar on the spool hub.
3. Remove the wire spool.
4. Place the fastening collar back on the spool hub (to keep it with the wire feeder).

3.5 INSTALLING AND REPLACING FEED ROLLS

Replace the wire feed rolls when the material and diameter of the filler wire changes.

Select the new wire feed rolls according to the tables here: "Wire feeder consumables" on page 114.

To replace the wire feed rolls:

1. Open the wire feed mechanism cabinet.
2. Release the pressure feed roll locking arms on the wire feed mechanism.

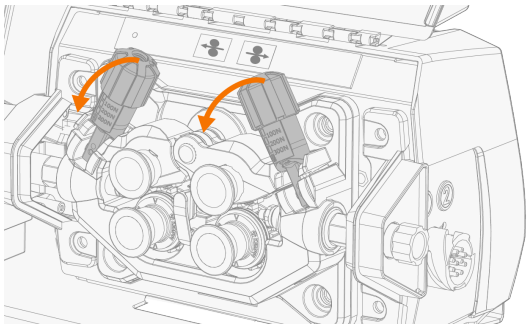

3. Pull out the pressure feed roll mounting pins and remove the pressure feed rolls.

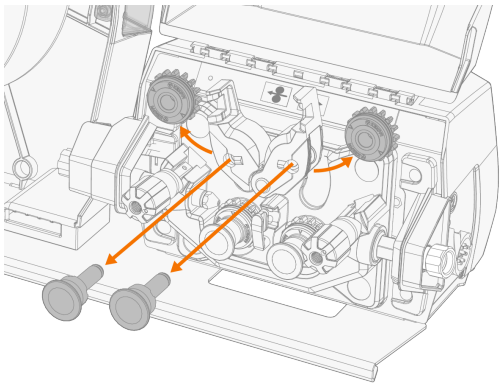

4. Pull out the drive feed roll mounting caps (by turning them slightly counter-clockwise and then pulling) and remove the drive feed rolls.

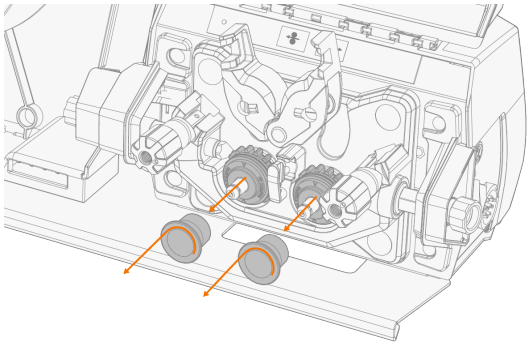

5. Install the new wire feed drive rolls. Align the cut on the drive rolls' bottom with the pin on the drive shaft. Lock in place with the mounting cap.

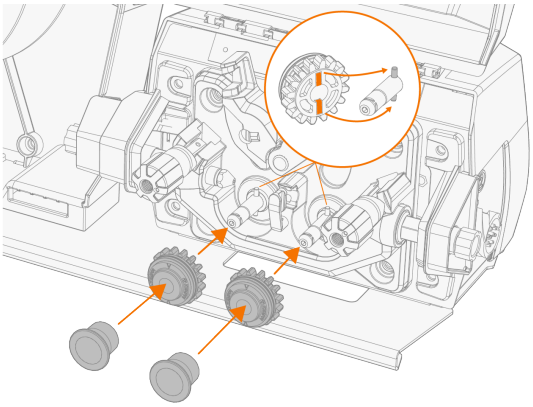

6. Install the new wire feed pressure rolls. Lock in place with the mounting pins.

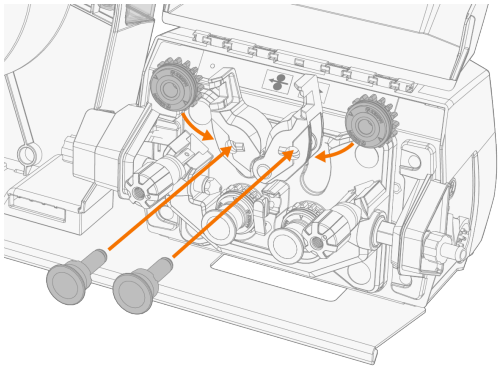

7. Close the pressure roll locking arms to secure the pressure roll locking arms.

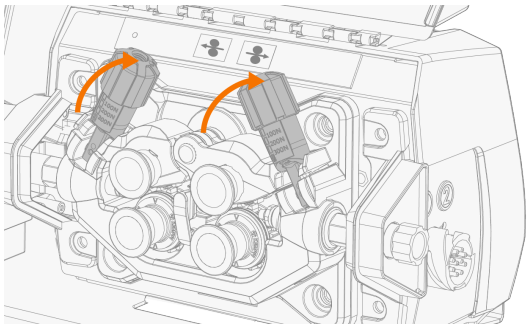

8. Ensure that the mounting caps and mounting pins are properly locked in their places.
9. Close the wire feed mechanism cabinet.

Refer to "Installing and replacing filler wire and wire spool" on page 36 for more information on the filler wire installation.

3.6 INSTALLING AND REPLACING WIRE GUIDES AND WIRE LINER

The wire feed mechanism includes four replaceable wire guide components:

- Wire inlet insert
- Wire inlet guide tube
- Middle wire guide tube (prism)
- Wire outlet guide tube.

Replace them when the filler wire diameter or the material changes, or as required.

In addition to the wire feed mechanism's wire guide components, also the wire liner needs to be changed depending on the filler wire material. Select either the steel spiral wire liner or the DL Chili wire liner.

Installing wire guide components

Select the new wire guide components according to the tables here: "Wire feeder consumables" on page 114.

To replace the wire guide components:

1. Release the pressure arms and remove the filler wire and wire feed rolls from the system.
   >> Refer to "Installing and replacing feed rolls" on page 40 for more information on the wire feed roll removal.
2. Install the inlet insert from the wire spool side. Remove the existing inlet insert first, if already installed.

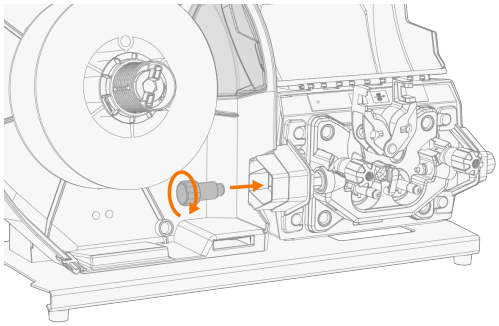

3. Install inlet guide tube, middle guide tube (prism) and outlet guide tube in the wire feed mechanism.

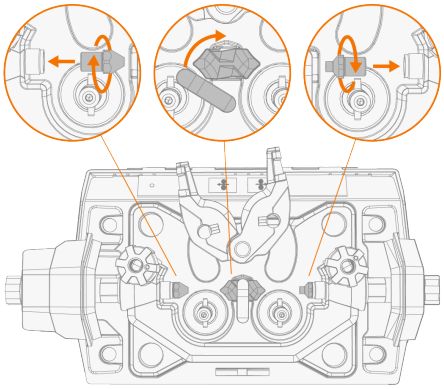

4. Install the new wire feed rolls.
   >> Refer to "Installing and replacing feed rolls" on page 40 for more information on the wire feed roll installation.

Installing steel spiral wire liner

The separate 3 meter cover hose is delivered with the CoolFeed 300 wire feeder.

Use the steel spiral wire liner with carbon and low-alloy steel materials (Fe).

1. Cut the steel spiral wire liner to a maximum length of 5 meters.

File the cutting surface smooth so that no sharp edges remain.

2. Strip the plastic housing of the steel spiral wire liner for 100 mm at the wire feeder end of the wire liner, and for 50 mm at the welding torch end of the wire liner.

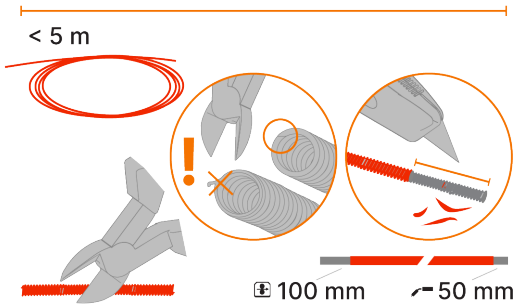

3. Optional, if cover hose used: Insert the steel spiral wire liner into the cover hose, sliding it all the way through. (Leave approx. 10 centimeters of the wire liner's end out at the wire feeder end of the cover hose.)

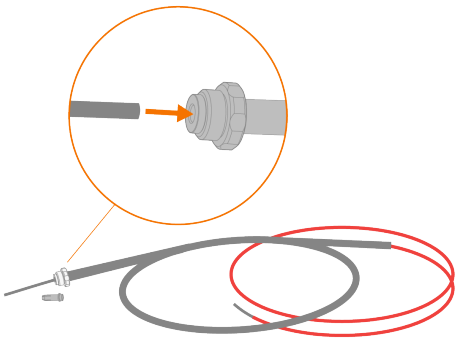

4. Release and remove the wire outlet's outer collar temporarily.
5. Insert the steel spiral wire liner's end through the wire outlet's outer collar and the tightening cone delivered with the wire liner, and into the wire feed mechanism's outlet. Push the wire liner all the way in until it stops at the wire outlet guide tube.
6. Turn the wire outlet's outer collar clockwise to tighten the wire liner in place.

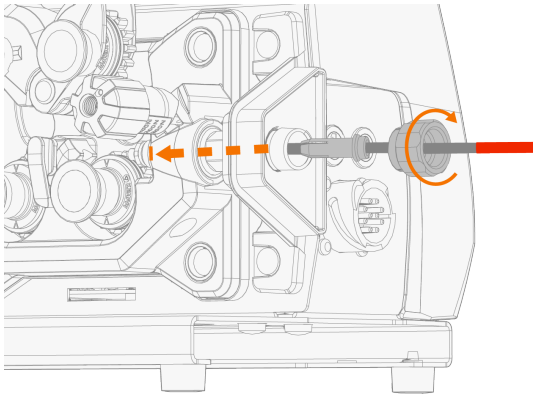

7. Optional, if cover hose used: Push the cover hose end to the outlet connector and on its threads. Turn it clockwise to tighten the cover hose in place.

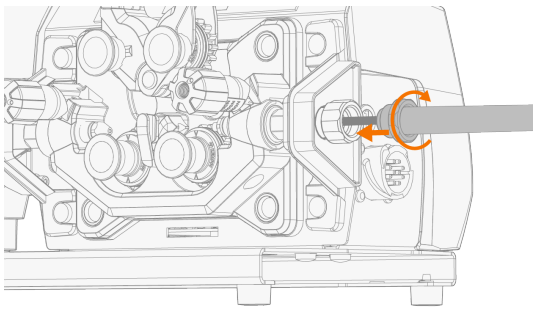

Installing DL Chili wire liner

The separate 3 meter cover hose is delivered with the CoolFeed 300 wire feeder.

Use the DL Chili wire liner with aluminum and stainless steel materials (Al, Ss).

1. Cut the DL Chili wire liner to a maximum length of 5 meters.



2. Insert the DL Chili wire liner into the cover hose, sliding it all the way through. (Leave approx. 10 centimeters of the wire liner's end out at the wire feeder end of the cover hose.)

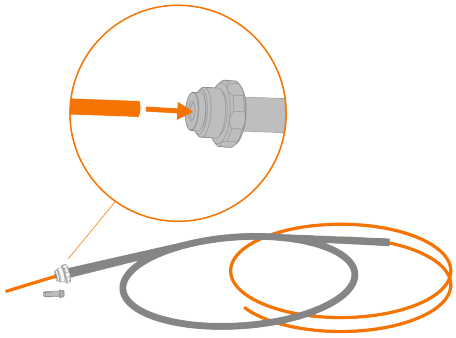

3. Release and remove the wire outlet's outer collar temporarily.
4. Insert the DL Chili wire liner's end through the wire outlet's outer collar and the tightening cone delivered with the wire liner, and into the wire feed mechanism's outlet. Push the wire liner all the way in until it stops at the wire outlet guide tube.
5. Turn the wire outlet's outer collar clockwise to tighten the wire liner in place.

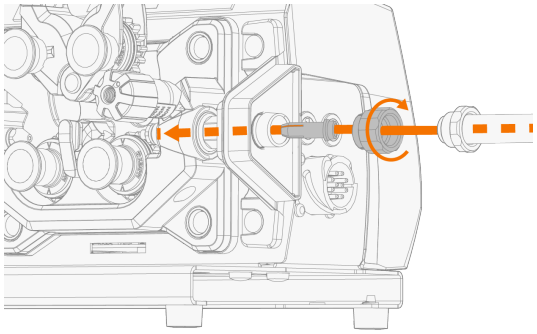

6. Push the cover hose end to the outlet connector and on its threads. Turn it clockwise to tighten the cover hose in place.

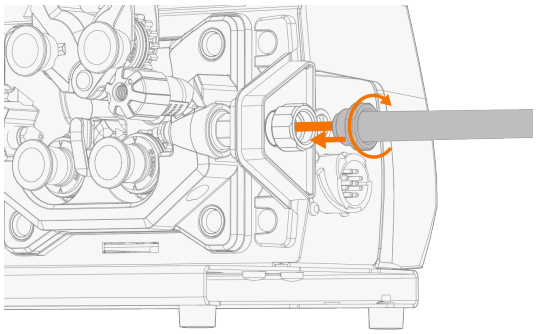

3.7 CONNECTING CABLES AND HOSES

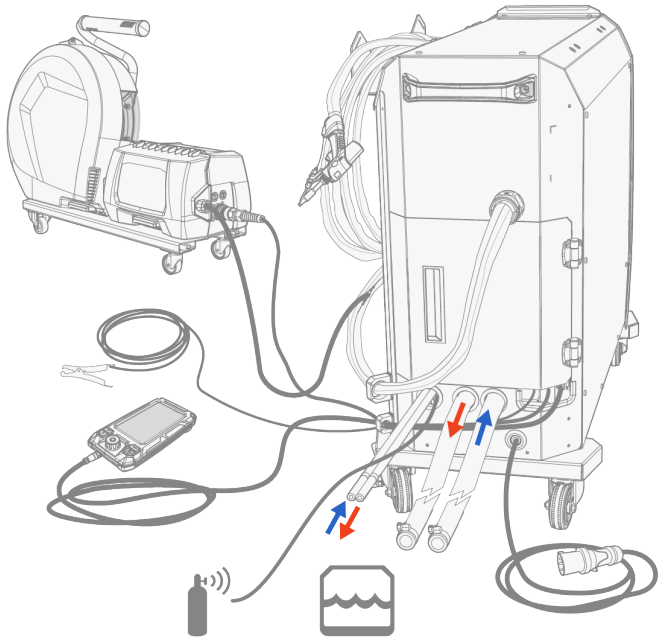

Route the cables as neatly as possible.

For more information on the laser power source connector locations, refer to "Laser power source" on page 8.

The laser welding torch is factory-installed, except for the cooling lines.

To connect the cables, proceed as follows:

1. Connect the main cooling hoses from the cooling unit (chiller). Push the connectors together until they lock in place. Check the inlet/outlet color-coding on the hoses for correct order.

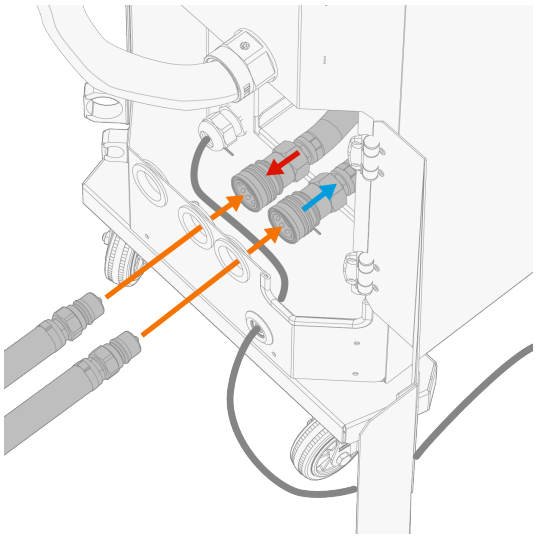

2. Connect the laser welding torch cooling hoses to the laser welding torch's cooling hose connectors (routed in the top left section of the laser power source rear cabinet).

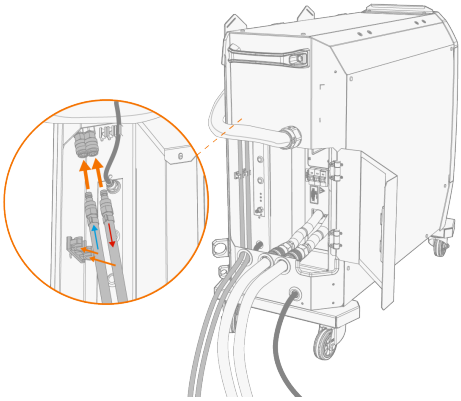

3. Connect the wire feeder control cable to the wire feeder and to the laser power source. Place the connector in the correct position and tighten with the connector collar. (The second wire feeder connection is needed only in a double wire feeder setup.)

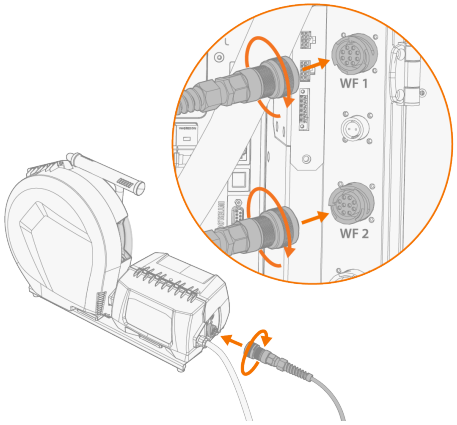

4. Push the shielding gas hose to the shielding gas hose connector in the laser power source so that it locks.

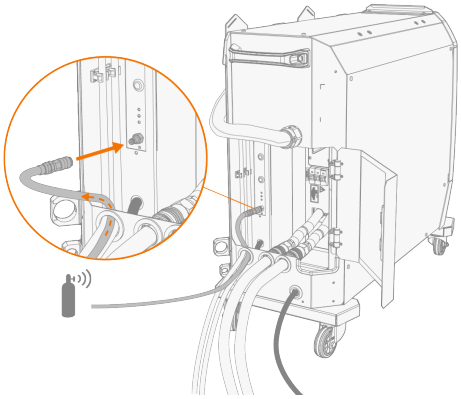

5. Connect the control pad's control cable to the control pad and to the laser power source. Place the connector in the correct position and tighten with the connector collar.

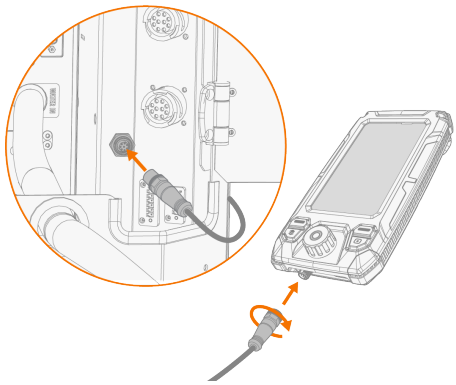

6. Connect the shielding gas hose to the gas bottle.
7. Secure the cables through the two cable sockets in the rear corner of the laser power source. The cable sockets help to guide and keep the cables in order.

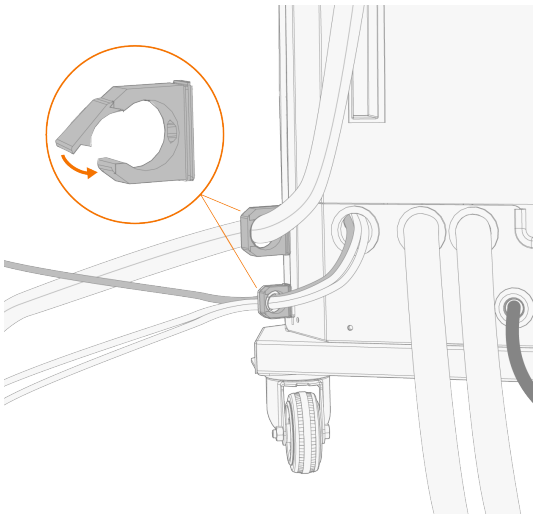

⚠ *Ensure that you have connected and tightened all the cables properly.*

8. Connect the safety contact cable (2-pin) to the laser welding power source. Place the connector in the correct position and tighten with the connector collar.

For connecting the safety contact cable to the work piece, refer to "Preparing welding system for use" on page 60.

3.8 CONNECTING SAFETY CONTACT CABLE

The laser system requires the use of a dedicated safety contact cable to close the safety circuit for welding. If the system doesn't detect the safety contact when starting to weld, welding is automatically prohibited.

1. Connect the safety contact cable to its connector in the power source rear.
2. Connect the safety contact clamp (in the other end of the cable) to the workpiece. Ensure that the surface contact to the workpiece is clean of metal oxide and paint and that the clamp is firmly secured.

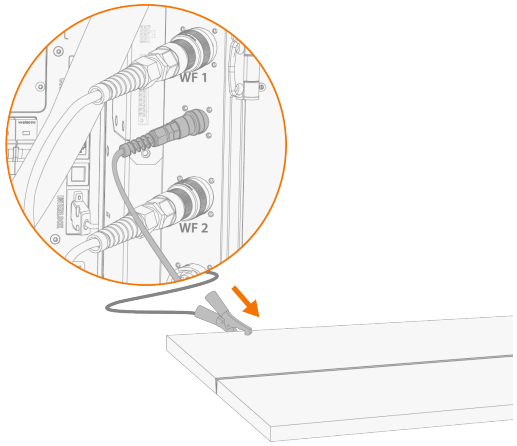

3.9 CONNECTING DOOR INTERLOCK AND SIGNAL LIGHT

Only an authorized electrician is allowed to install the connector wiring.

The connector plugs are delivered with the FastBeam 3 equipment (plugged into the connectors).

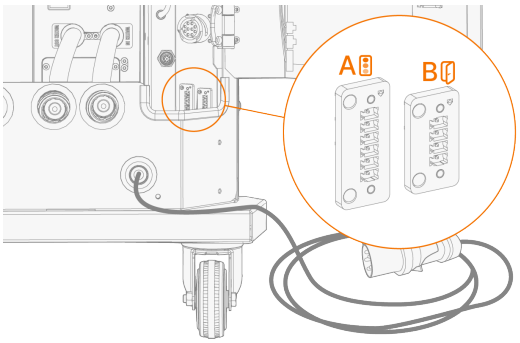

A = External signal light connector, B = Door interlock connector.

Door interlock

*Review and verify your laser-controlled area's setup and connections for the door sensor. The door sensor(s) have to be run through an additional safety relay. The FastBeam 3 door interlock safety function is compatible with **PL d, Category 3, consisting of two NO (normally open) contacts** that work simultaneously. For more information on the door sensor safety function logic, refer to "Safety functions" on page 26.*

To connect the door interlock (B) wiring from the safety relay, proceed as follows:

1. Unplug the plug connector from the connector on the laser power source.
2. Connect first the wiring for the first door interlock circuit using the top two plug connector pins. Secure with the connector screws.
3. Connect next the wiring for the second door interlock circuit using the bottom two plug connector pins. Secure with the connector screws.

Both two door interlock circuits are required to be connected for the safety feature to function.

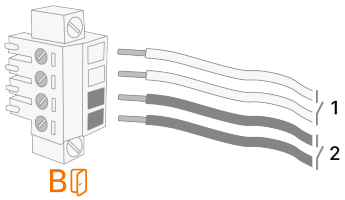

B (1) = 1st door interlock circuit, B (2) = 2nd door interlock circuit.

4. Plug in the connector.

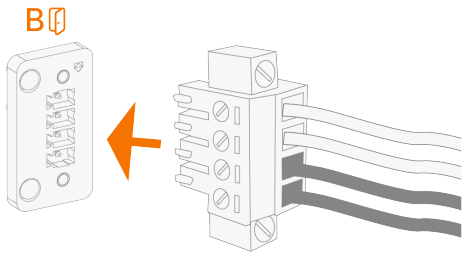

Example of a functioning door interlock installation can be found here: "Appendix: Door interlock example" on page 122.

External signal light

The use of the external signal light depends on the local laser-controlled area requirements and design.

To connect the external signal light (A) wiring, proceed as follows:

1. Unplug the plug connector from the connector on the laser power source.
2. Connect first the wiring for the green light using the top two plug connector pins. Secure with the connector screws.
3. Connect next the wiring for the yellow light using the middle two plug connector pins. Secure with the connector screws.
4. Connect last the wiring for the red light using the bottom two plug connector pins. Secure with the connector screws.

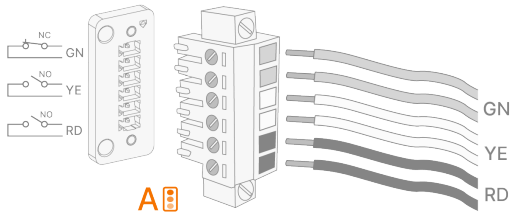

RD = Wiring for the red light, YE = Wiring for the yellow light, GN = Wiring for the green light.
AC: 0...250 V, 12 A, or DC: 0...24 V, 10 A / 48 V DC, 1 A.

5. Plug in the connector.

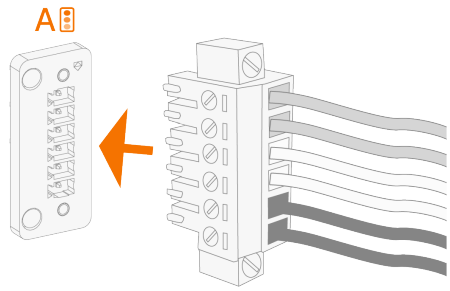

Route the cables as neatly as possible.

3.10 PREPARING LASER WELDING TORCH

This chapter describes the installation of the laser welding torch nozzles and the wire liner with FastBeam 3.

For preparing the wire liner(s), refer to "Installing and replacing wire guides and wire liner" on page 42.

1. Install the filler wire guide assembly into the holder on the laser welding torch. (The final positioning and adjustments are completed at a later stage.)
   >> Remove the front nuts and washer.
   >> Insert the wire guide assembly through the holder's aperture from the rear.
   >> Insert the front nuts and washer back in place.

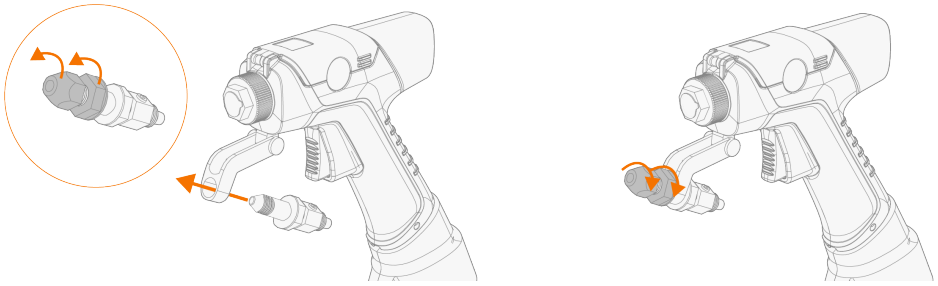

2. Remove the protective cap and insert the nozzle neck tube into the laser welding torch aperture. Secure the nozzle neck tube in place by tightening the neck collar nut.

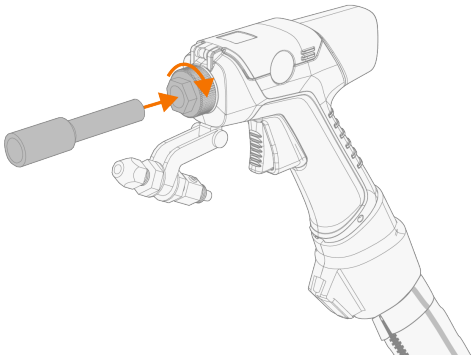

Save the protective cap for later use. Keep it together with the QBH and fiber head protective cap in the parts box delivered with the welding torch. These may be needed during welding torch maintenance and/or replacement.

3. Screw the welding nozzle into the nozzle neck.
   >> Ensure the filler wire groove in the welding nozzle is aligned with the filler wire guide below. Adjust the position by temporarily loosening the neck collar nut and turning the whole nozzle neck assembly.

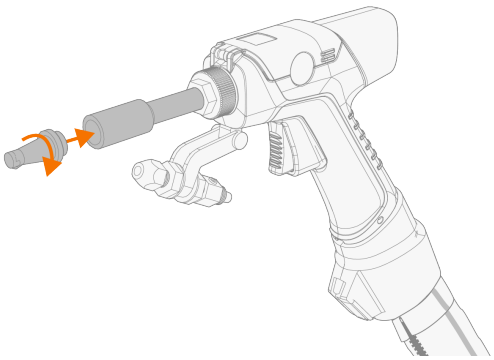

Select and replace the welding nozzle according to your welding application. For more information on the welding nozzles delivered with the equipment, refer to "Welding head nozzles" on page 118.

4. Insert the filler wire guide nozzle into the holder on the laser welding torch and secure it in place by tightening the holder collar nut.

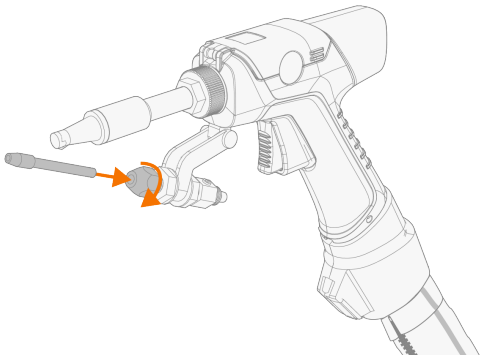

Select and replace the filler wire guide nozzle tip according to your filler wire diameter. For more information on the nozzles delivered with the equipment, refer to "Welding head nozzles" on page 118.

5. Install the wire liner into the laser welding torch cable sleeve at a suitable location. The zippers (and therefore the aperture for the wire liner) on the cable sleeve can be moved as needed.

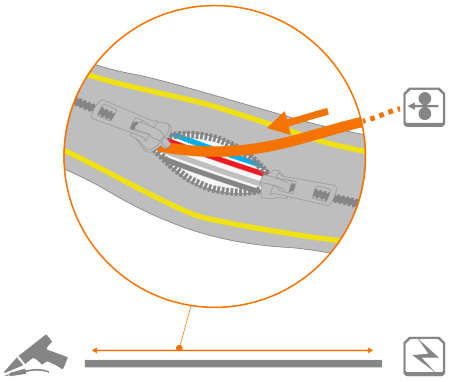

6. Route the wire liner through the aperture in the sleeve end and in the laser welding torch handle, and towards the filler wire guide nozzle.

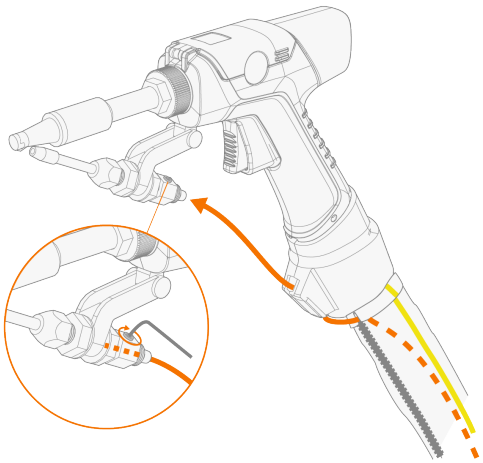

7. Push the wire liner end into the wire guide bottom and secure it in place by tightening the screw on the side of the guide housing with an Allen key.

Select and replace the wire liner according to your welding application. For more information on preparing and installing the wire liner in the FastBeam system, refer to "Installing and replacing wire guides and wire liner" on page 42.

8. Adjust the angle and the length of the filler wire guide setup so that the filler wire guide nozzle is in the desired welding position (relative to the welding nozzle).
   >> To adjust the angle, move the wire guide assembly by hand. Untighten and tighten the joint screw as necessary.
   >> To adjust the length, release the nuts on the either side of the bracket and position the wire guide assembly. Tighten the nuts to secure the setup.

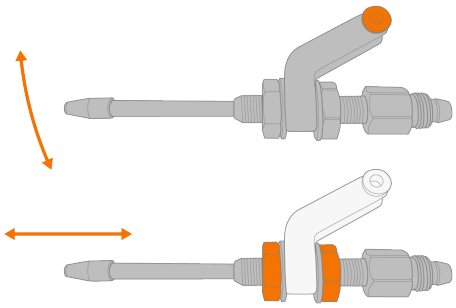

For the final laser welding torch adjustment and the focus point calibration, refer to "Focus calibration" on page 63.

Double-wire setup

When using two wire feeders and welding with a dual-wire setup, the laser welding torch must be equipped with the filler wire guide setup for two filler wires.

1. Replace the original filler wire guide setup with the wire guide setup for two filler wires.
   >> Secure the filler wire guide bracket to the laser welding torch body with the screw provided. Use an Allen key.

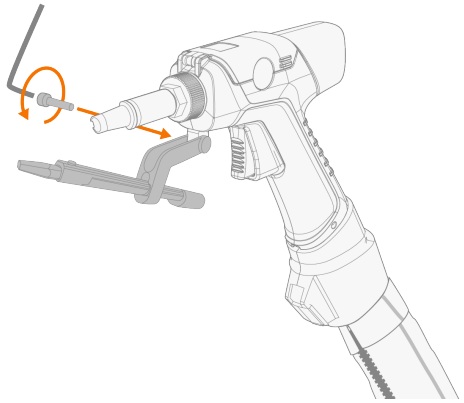

2. Adjust the filler wire guide length as required.
   >> Release the small lock screw with an Allen key on the bottom of the bracket to allow adjustment. Tighten when ready.

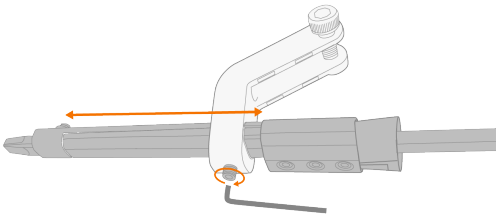

3. To install the wire liners into the double filler wire guide:
   >> Route the wire liners following the same principle than with the single filler wire setup.
   >> Push the plastic locking clip into the filler wire guide rear, and then insert the wire liners into their slots.
   >> Tighten the wire liners in place with the screws on the underside. Use an Allen key.

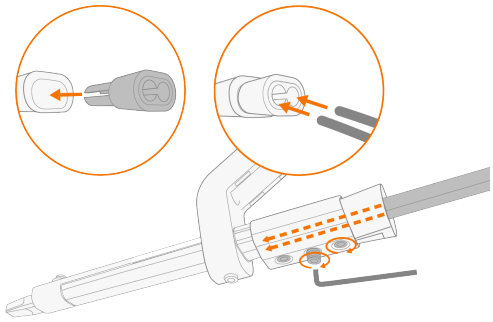

Trigger guard installation (optional)

To install the trigger guard, the wire guide assembly must be temporarily removed first.

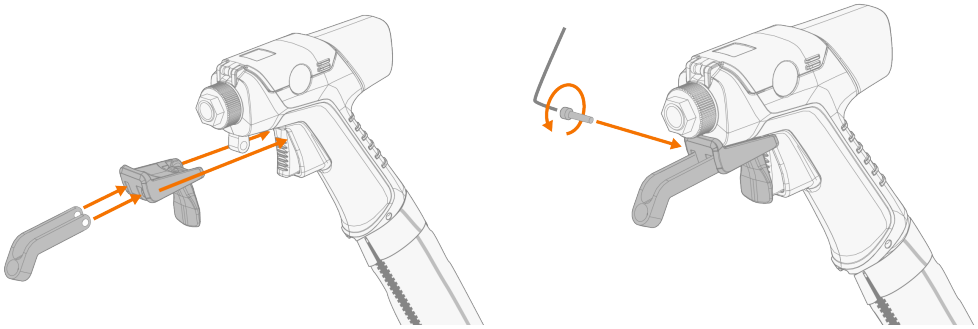

3.11 CONNECTING SHIELDING GAS SUPPLY AND TESTING GAS FLOW

Handle gas bottles with care. There is a risk of injury if the gas bottle or the bottle valve is damaged!

Always secure the gas bottle properly in an upright position to a special holder on the wall or on a dedicated rack. Always keep the gas bottle valve closed when not welding.

- Do not use the whole contents of the bottle.
- Always use an approved and tested regulator and flow meter.

Nitrogen and argon can be used as shielding gas. Note that welding is not possible without sufficient shielding gas flow.

Follow any operational regulations of the gas(es) used, as well as the local and national safety requirements.

1. Place the gas bottle in a suitable, secure location.
2. Complete the gas regulator and gas hose installation at the gas bottle end according to their suppliers' instructions.
3. Connect the gas hose to the laser power source.

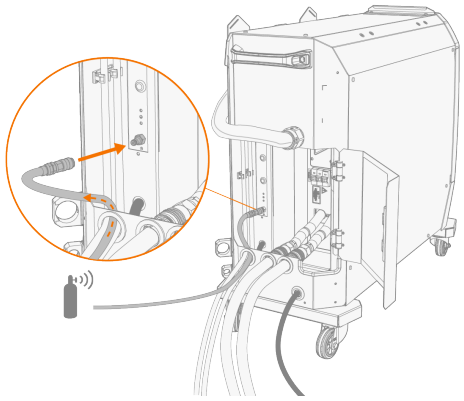

Continue to the next steps only after you have completed the full equipment installation, and you are commencing welding.

4. Open the gas bottle valve.
5. Press the gas test button in the laser power source's front panel to flush the previous shielding gas and to run the new gas into the system.

   >> The gas test function can be activated also in the control pad user interface.

Use the gas test function also to test that the shielding gas flows through the system properly.

6. Press the gas test button again to adjust the gas flow. Use an external flow meter and regulator for measuring and adjustment.

Recommended gas flow rates (for general guidance only):

Gas	Gas flow*
Argon	10...25 l/min
Nitrogen	10...25 l/min

** Depending on the welding nozzle size and laser power.*

4. OPERATION

The equipment may be installed, operated, maintained or repaired by authorized and trained professional personnel only. The equipment may be used only for welding metal or cleaning metal.

Before using the equipment, ensure that all the necessary installation actions have been completed according to your equipment setup and instructions, and that you have read and understood all the safety requirements.

Only connect the welding machine to an earthed electric network.

The FastBeam laser welding machine is a Class 4 laser product that can generate also reflected or scattered radiation, leading to personal injury or fire hazards. In addition to the common welding safety practices, laser welding requires a dedicated laser-controlled area and a laser welding training for safe operation.

Due to the laser safety requirements and the equipment's IP classification, the equipment is not suitable for use in exposed outdoor environments.

Welding is forbidden in places where there is an immediate fire or explosion hazard!

The cables must be handled with caution right after welding, they may heat up during welding.

Use the equipment only in non-condensing conditions.

Check that there is enough space for cooling air circulation in the machine vicinity.

If the welding equipment is left unused for a longer period, disconnect the mains plug from the mains.

Always check before use that control cables, shielding gas hose, safety contact cable and clamp and mains cable are in serviceable condition. Ensure that the connectors are correctly fastened. Loose connectors can impair welding performance and damage connectors.

4.1 LASER POWER SOURCE STATUS LIGHTS

The front section of the FastBeam 3 laser power source has colored lights to indicate the status of the device. One in both front top corners and one in the front middle panel. This chapter describes how to interpret the lights.

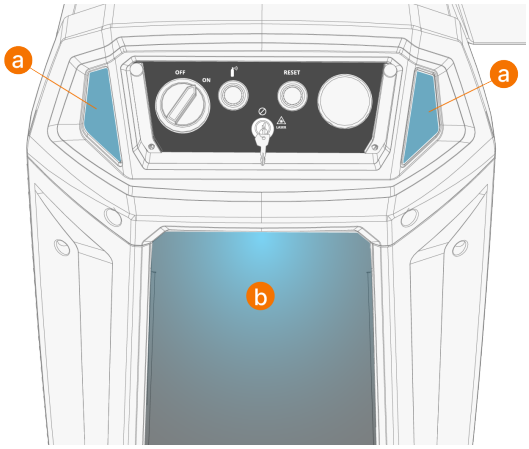

Top status lights (a)	Center status light (b)	Status description
Blue, static	Blue, static	Power is on and the device is in standby.
Blue, breathing	Blue, breathing	Power is on and the device is in sleep mode.
Orange, static	Orange, static	Device is ready to weld and the safety circuit is functional.
Orange, dynamic	Orange, static	Welding is ongoing and the laser beam is on.
Yellow, static	-	There is a minor problem in the welding system requiring user's attention. Welding is still possible.
Red, static	-	There is a critical problem in the welding system and welding is not possible.

All error states require prioritizing the investigation of safety hazards. It is strictly prohibited to force a reset or resume operations before confirming that the fault has been eliminated. After resolving the issue, the equipment must be confirmed to have returned to normal via a reset operation before resuming work.

External signal light

The FastBeam 3 laser power source includes a connector for an external signal light – e.g. to be placed outside the laser welding area. The installation of the external signal light requires a qualified electrician to make the connections.

The external signal light feature allows the following functioning logic:

- When welding with laser, the signal light is red.
- When not welding with laser but the laser module is on and nothing is preventing welding (e.g. the safety circuit), the signal light is yellow.
- When the laser module is off, the signal light is green.

For more information on installing the external signal light, refer to "Connecting door interlock and signal light" on page 50.

4.2 PREPARING WELDING SYSTEM FOR USE

Complete the following checklist before taking the welding system in use.

Checklist item		Description/Reference	Ok
When the laser welding power source is still off:			
1.	Ensure the work area meets the laser welding and safety requirements.	Refer to laser safety training, safety instructions delivered with the equipment and to "Safety" on page 21 chapter.	
2.	Ensure the installation has been completed according to your welding equipment setup and process.	Refer to the "Installation" on page 30 chapters.	
3.	Check the laser welding torch protective lens, and replace as necessary.	Refer to the "Laser welding torch protective lens check and replacement" on page 103 chapter.	
4.	Check that filler wire, wire liner, wire nozzle and welding nozzle are suitable for the job and the material to be welded.	For replacing these, refer to the corresponding installation chapters. Once the equipment has been turned on, ensure also that the device and memory channel settings correspond with the filler wire that is actually installed in the wire feeder ("Device settings" on page 82, "Welding parameters" on page 72, "Memory channels" on page 71).	
5.	Prepare the cooling system.	Refer to the chiller manufacturer's instructions and to the steps after this checklist table.	
6.	Prepare the shielding gas supply.	Refer to you gas supply's instructions and setup. General shielding gas requirements for laser welding can be found in "Connecting shielding gas supply and testing gas flow" on page 57.	
7.	Connect the safety contact cable to the work piece.	Refer to the steps after this checklist.	
8.	Ensure you're wearing all of the required personal protective equipment (PPE).	Refer to laser safety training, safety instructions delivered with the equipment and to "Safety" on page 21 chapter.	
When the laser welding power source is turned on (refer also to the steps after this checklist table):			
9.	Let the cooling unit cool down or warm up the system to the correct temperature for welding.	In non-condensing conditions, the target temperatures are +25°C for the laser module's cooling loop, and +27°C for the laser welding torch's cooling loop. Refer also to the steps and notifications after this checklist table.	
10.	Adjust the basic device settings.	Refer to the "Device settings" on page 82 chapters.	

11.	Perform safety function checks:	Ensure also that the wire feed and gas supply stop, in addition to deactivation of the laser radiation.	
	- Laser welding torch safety contact	Initially, looking at the status bar on the control pad, check that the safety contact icon reacts to the laser welding torch nozzle's contact to the workpiece. If it doesn't, check the positioning and contact of the safety contact cable. Recheck. For the control pad icons, refer to "Info and status views" on page 86. The main check needs to be done when starting to weld. When welding, lift the welding torch nozzle slightly away from the work piece surface so that it becomes disconnected from the workpiece. Laser radiation, wire feed and gas supply must stop.	
	- Laser welding torch safety contact delay and power cutoff	Make a contact with the welding torch nozzle to the workpiece and keep it in contact, but wait for ten seconds before pressing the welding torch trigger. After this pause, when the trigger is pressed, welding should not start (if the contact to the workpiece was maintained without breaking it).	
	- Door interlock	When the laser controlled area's door is open or opened, the safety system must engage immediately. Welding must stop and the system must not allow to start welding. *Refer also to your laser-controlled area's specifications.*	
	- Laser power source emergency stop	When the emergency stop on the laser power source is pressed, the safety system must engage immediately. Welding must stop and the system must not allow to start welding.	
	- External signal light	The laser-controlled area's external signal light (optional, depending on the laser-controlled area's setup and specifications) must reflect the current operational status. In principle: If the light is red, welding is ongoing and you must not enter the work area; if the light is green, welding is stopped and it should be safe to enter.	
12.	Ensure the laser focus point is calibrated properly.	For more information on the laser focus point calibration, refer to "Focus calibration" on page 63.	

Preparing chiller

To prepare the cooling unit (chiller) for welding, refer to the chiller manufacturer's instructions. At least the following must be completed:

1. Fill the chiller's cooling liquid container with the coolant.
2. Pump the coolant through the system.
   >> Once the coolant is circulating, ensure that the coolant hoses and their connections are not leaking.
3. Adjust the coolant temperatures. In non-condensing conditions, the target temperatures are +25°C for the laser module's cooling loop, and +27°C for the laser welding torch's cooling loop.

⚠ *Do not use the chiller to cool the system below the dew point of the surrounding air. Resulting condensation may damage the equipment.*

ⓘ *In low ambient temperatures, warming up the system may take up to 30 minutes. Provided that the system remains under non-condensing conditions, the chiller can be started separately to preheat the system.*

ⓘ *If the system temperature is outside the internally set safety limits, the system triggers an alarm and prevents welding.*

For more information on the cooling and coolant requirements, refer to "Cooling unit" on page 17 and "Filling chiller and circulating coolant" on the next page.

Connecting safety contact cable

Attach the safety contact cable clamp on the weld piece.

For more information, refer to "Connecting safety contact cable" on page 49.

Turning on welding system

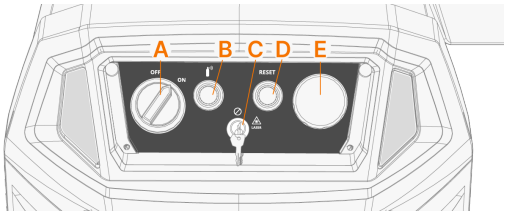

To turn on the welding equipment:

1. If pressed, pull the emergency stop switch (E) up.
2. Turn the power source main switch (A) to ON (I).
   >> This also turns on the wire feeder.
3. As applicable, check the shielding gas flow by pressing the gas test button (B).
4. Turn the laser lock key (C) to unlock the laser module operation.
5. Press the reset button (D).

Pressing the reset button is required each time the equipment is turned on.

Pressing the reset button is required each time the emergency stop switch is pulled up.

Selections and parameters

To select the operation mode (welding / cleaning), refer to "Device settings" on page 82.

To adjust the parameters, refer to "Welding parameters" on page 72 or "Cleaning parameters" on page 76.

For general laser welding principles, refer to "Welding with laser" on page 93.

For general laser cleaning principles, refer to "Cleaning with laser" on page 97.

If the welding equipment is left unused for a longer period, detach the mains plug to disconnect the equipment from the mains.

4.2.1 FILLING CHILLER AND CIRCULATING COOLANT

Distilled water is recommended to be used as the coolant. If the ambient temperature drops closer to +5 °C, a propylene-glycol coolant solution should be used.

Using the equipment in below 5 °C temperatures is prohibited, and any damage caused by such operation may not be covered by the product warranty.

Use only propylene-glycol mixture intended for welding cooling systems, for example Kemppi cooling liquid. The propylene-glycol concentration should be 25...30% (approx. 1.5 parts of Kemppi cooling liquid MGP 4456 and 1 part of distilled water).

Refer to the cooling unit (chiller) manufacturer's instructions for additional chiller compatibility requirements, for adding the coolant into the chiller, and for circulating the coolant in the system.

Check and add coolant as necessary.

The coolant must be drained in these situations:

- When the coolant has been used for more than 3 months.
- When the equipment is left unused for more than a week. Storing the equipment with the coolant in the system may cause damage to the equipment.
- When the equipment is being transported.
- When there is a danger of the ambient temperature dropping below 5 °C.

Antifreeze

If there is a danger of the ambient temperature dropping below 5 °C, even momentarily, and the cooling system cannot be drained empty, it is mandatory to use the propylene-glycol solution in 25...30% propylene-glycol concentration (as described above).

The 25...30% propylene-glycol concentration provides protection against freezing down to -10 °C temperature. Note that using the equipment is still prohibited in below 5 °C temperatures.

4.2.2 FOCUS CALIBRATION

This chapter describes the basic laser focus calibration steps with FastBeam 3 laser equipment. Before commencing, ensure you have read and understood all the safety requirements in this operating manual and in the safety instructions. Any laser welding operation must be carried out in a laser-controlled area. Also ensure that you are wearing all of the required personal protective equipment, including the laser safety goggles.



To adjust the laser beam's focal point, the neck of the laser welding torch can be extended or retracted. For the focus calibration purposes, the neck has a graduated scale (-10...+10 mm) marked on it.

For the focus calibration process, a **1 mm steel sheet** is required, and the laser welding equipment must be ready to weld.

Even if the calibration process requires only low laser power and short spot welds, the safety requirements must be fulfilled before commencing.

The laser welding torch includes a low-power guide laser ("pilot laser") that indicates the position of the welding beam and assists in workpiece alignment before and during welding. The guide laser does not contribute to the welding process.

1. Loosen the neck collar to adjust the welding nozzle. Extend the neck so that the welding nozzle is in its outermost position. This ensures a clearly positive focus to start with.

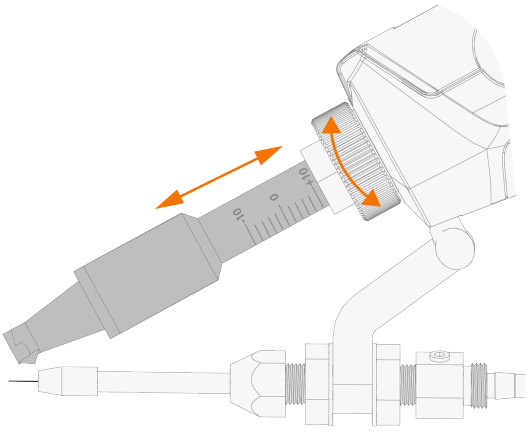

2. In the welding machine's welding parameter settings ("Welding parameters" on page 72):
   - Enable the spot welding function and adjust the spot weld duration to **0.1 seconds**.
   - Set the laser power to **300 watts**.
   - Disable the filler wire feeding (select "**no wire**" in the settings).
3. Adjust the filler wire so that the tip of the filler wire "hits" the guide laser beam. For this, you should have a normal stick-out length of filler wire.

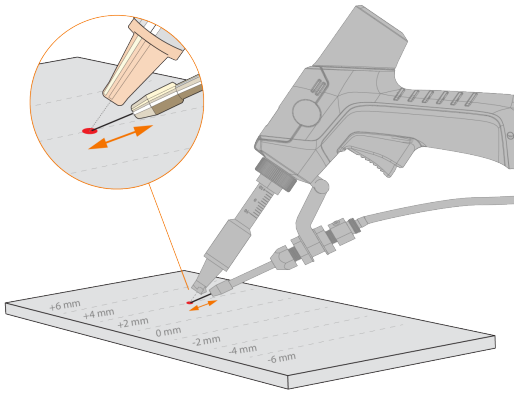

4. Move the wire guide slightly aside, just to ensure that the welding laser beam does not hit the filler wire during calibration.

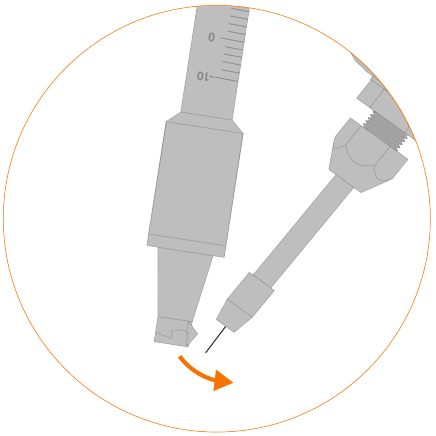

5. Keeping the welding torch almost vertical towards the surface of the 1 mm steel sheet, place the welding torch so that the tip of the filler wire touches the metal sheet.

The laser beam can reflect from different metal surfaces and the reflections can also cause damage or injuries. Do not use the laser welding torch close to a 90 degree angle towards the weld piece surface to avoid the laser beam reflecting straight back to the welding torch or to the welder holding the welding torch.

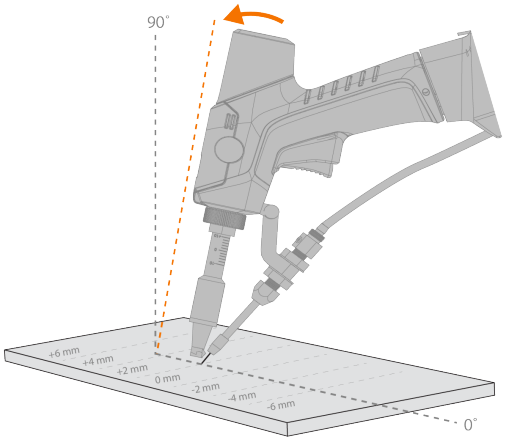

6. Perform a single spot weld.
7. Retract the neck so that the welding nozzle moves inward in small (approx. 2 mm) increments.

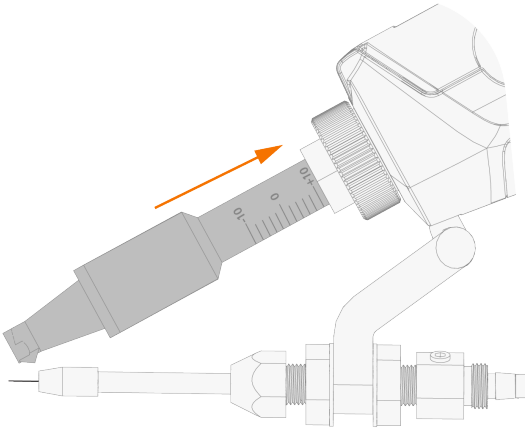

8. Readjust the filler wire and perform multiple spot weld rows with different welding nozzle extension positions (by repeating the above procedure). Record which focus setting was used for each spot weld.

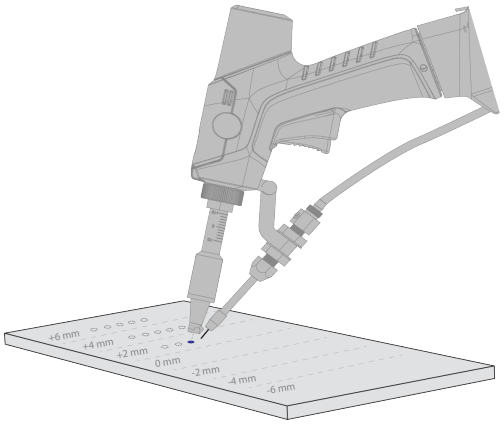

9. Once the calibration spot welds are done, examine the resulting heat marks on the **backside of the metal sheet**. The heat mark is the strongest when the focal point is at the metal sheet surface (the correct focus setting).

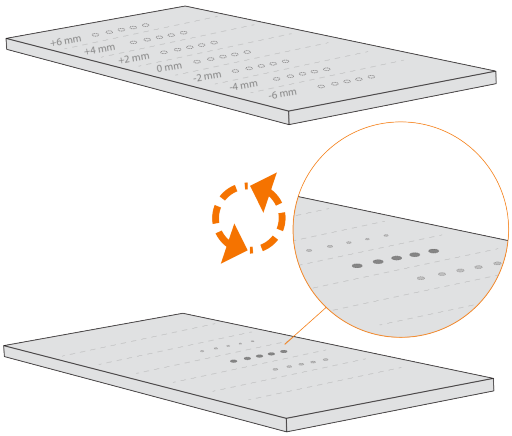

10. Adjust the focus accordingly.

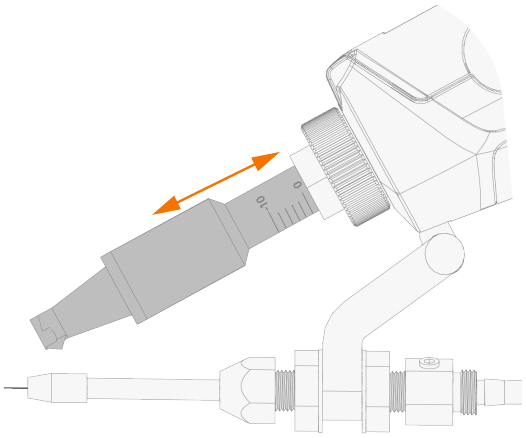

11. Tighten the neck collar to secure the neck in place.

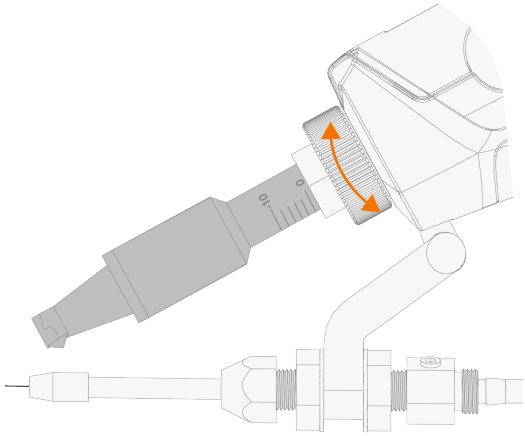

12. Readjust the wire guide to align with the calibrated neck tube setting.

For more information on using the control pad and adjusting welding parameters, refer to "Using control pad and parameter adjustments" on the next page and "Welding parameters" on page 72.

4.3 USING CONTROL PAD AND PARAMETER ADJUSTMENTS

The FastBeam 3 ControlPad connected to the FastBeam 3 laser power source is the laser welding system's main control panel.

The control pad has a touchscreen. The features and functions described here, can be accessed by turning and pressing the control knob and the physical function buttons, or by clicking on the user interface items and selections directly on the touchscreen.

FastBeam 3 ControlPad user interface

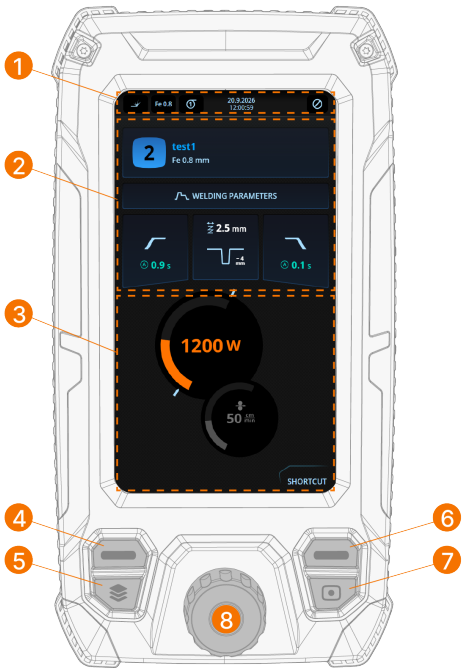

General

1. Status bar
   >> This shows the operating mode, filler wire material, and the wire feeder used. Also the date and time, system errors and warnings as well as the laser status are indicated in the status bar.
   >> Refer to "Info and status views" on page 86 for the symbols used.
2. Memory channel and parameter section
   >> Refer to "Home view" on the next page, "Memory channels" on page 71 and "Welding parameters" on page 72 for more details.
3. Main welding parameters (or cleaning parameters)
   >> Refer to "Home view" on the next page and "Welding parameters" on page 72 or "Cleaning parameters" on page 76 for more details.
4. Selection button
   >> Function depends on the view and adjusted parameter.
5. View menu button
   >> Opens the view menu.
   >> Long-press returns to the Home view.
6. Selection button
   >> Function depends on the view and adjusted parameter.
   >> In the Home view, this button can be used as a shortcut for a selected function.
7. Memory channel button

>> Opens the Memory channels view.
>> Long-press saves the changed welding parameters to the currently active memory channel.

8. Control knob
>> In the Home view, short-press changes between the two main welding parameters, laser power and wire feed speed.
>> Turning and pressing the control knob selects and adjusts the selected welding parameter.
>> Function depends on the view and adjusted parameter.

View menu and functions

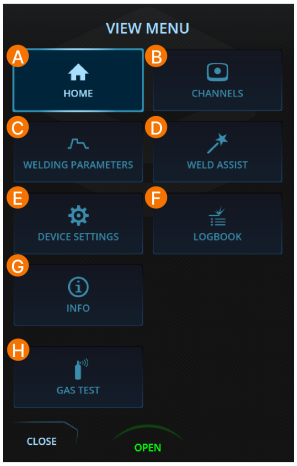

A. Home view
B. Channels view
C. Welding parameters view
D. Weld Assist view
E. Device settings view
F. Logbook view
G. Info view
H. Gas test function *

*) *When selected in the view menu, a gas test dialog opens. In addition to running gas test (for a pre-defined duration), it is possible to adjust the gas test duration in the wire inch dialog.*

The help section in the Info view provides a link (QR code) to access the equipment operating manual and other product information.

4.3.1 HOME VIEW

FastBeam control pad's **Home view** is also the main welding view.



1. Memory channel information
   >> Acts also as a shortcut to the memory channels view: "Memory channels" on the next page
2. Shortcut to the welding parameters or cleaning parameters view
   >> "Welding parameters" on page 72 or "Cleaning parameters" on page 76.
3. Upslope setting
   >> Acts also as a shortcut to the upslope adjustment dialog
4. Penetration settings
   >> Acts also as a shortcut to the penetration-related settings dialog
5. Downslope setting
   >> Acts also as a shortcut to the downslope adjustment dialog
6. Power setting
   >> By default, the control pad's control knob adjusts this.
   >> Selecting this by pressing on the touchscreen, opens the power adjustment dialog.
   >> Short press of the control knob button switches between the power and wire feed speed adjustments (if wire feed is enabled).
7. Wire feed speed setting
   >> Selecting this by pressing on the touchscreen, opens the wire feed speed adjustment view.
   >> Short press of the control knob button switches between the power and wire feed speed adjustments (if wire feed is enabled).
8. Custom shortcut
   >> The shortcut used can be selected or changed by long-pressing the corresponding function button below the screen or the touchscreen button.
   >> Once selected, the shortcut function can be used by pressing the corresponding function button below the screen or the touchscreen button.

When using only the control knob controls, the home view items other than the power and wire feed speed settings, can be accessed by long-pressing the control knob button. Using the touchscreen controls, those can be accessed directly by pressing the item on the screen.

Weld data overlay view during welding

A weld data overlay view is shown at the top of the screen during welding. Once finished, the weld data is still shown for a pre-defined duration.



After each weld, a summary of the weld is displayed briefly. The weld data history can be accessed in the "Logbook" on page 85.

4.3.2 MEMORY CHANNELS

The **Channels view** can be accessed either via the control pad's view selection menu or by pressing the physical memory channel shortcut button below the control pad display (refer to "Using control pad and parameter adjustments" on page 68 for more information).

The system has a total of 200 available memory channel slots for welding and 100 memory channel slots for weld cleaning.



If using the touchscreen, you can select a memory channel and its options using the on-screen controls. The following steps describe the procedures using the physical controls.

Changing memory channel

1. Turn the control knob to highlight the desired memory channel.
2. Press the control knob to select the channel and to open the **Actions** menu.
3. Select **Activate** by turning and pressing the control knob.

Managing memory channels

The memory channels are managed through the **Actions** menu.

1. Select a channel and open the **Actions** menu by pressing the control knob.
2. Turn the control knob to highlight the desired action.
3. Select the action by pressing the control knob.
4. Make further selections as required.

Available actions are:

- **Activate**: Activate the currently selected channel
- **Revert**: Cancel unsaved changes to the currently selected channel
- **Save changes**: Save changes to the currently selected channel
- **Save to...**: Save the currently selected channel's settings to another channel
- **Rename**: Rename the channel
- **Delete**: Delete the currently selected channel
- **Create channel with Weld Assist**: Create a new channel using the Weld Assist feature
- **Delete all channels**: Delete all channels

To filter the list of available memory channels, press the filter icon in the bottom-right corner in the **Channels view**, and in the dialog that opens, select the filters to be used:



If the automatic saving is not enabled in the device settings, the skewed channel number indicates that the set welding parameters are different from the ones currently saved on the active memory channel:



Changed welding parameters can be quickly saved onto the active memory channel by keeping the Memory channels button pressed for approx. 2 seconds. This works in any view.

4.3.3 WELDING PARAMETERS

The **Welding parameters** view lists the available adjustments for the laser welding process.

(This view is available when the operation mode is set to "Welding" in the device settings.)

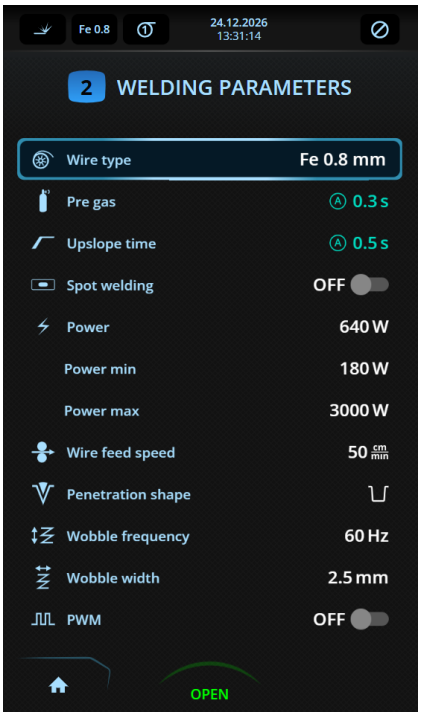

If using the touchscreen, you can select a parameter for adjustment using the on-screen controls. The following steps describe the procedures using the physical controls.

Adjusting welding parameters

1. Turn the control pad's control knob to highlight the desired welding parameter.
2. Press the control knob to select the welding parameter for adjustment.
3. Turn the control knob to adjust welding parameter value.
   >> Depending on the parameter to be adjusted, refer also to the welding parameter table below for more details.
4. Confirm the new value / selection and close the adjustment view by pressing the control knob.

Saving welding parameters for later use

A work channel is automatically created for the changed welding parameters. To save the set welding parameters on a memory channel, do one of the following:

- Quick active channel option: Keep the memory channel button pressed for approximately 2 seconds.
  >> This will save the parameter settings onto the currently active channel replacing its previous parameter settings.
- Memory channels view option: Go to the memory channels view and save the parameter settings onto a new channel.
  >> Refer to "Memory channels" on page 71 for more information.

Welding parameters and feature descriptions

The welding parameters that have the "Auto" setting as an option, and when that "Auto" setting is used, those welding parameters are adjusted automatically based on the laser power and according to the used filler material and thickness.

The adjustment ranges (minimum and maximum values) may differ from the ones mentioned in the table below, depending on the selected filler wire material.

Some of the parameter adjustments are visible in the welding parameters view only when the function in question is enabled (e.g. spot welding and PWM).

Parameter	Parameter value	Description
Wire type	No wire / WF1 wire / WF2 wire / WF1+WF2 wire	This is the filler wire selection (for the welding parameter adjustment). The filler wire options are based on the device settings. "No wire" allows welding without using filler wire at all. The second wire feeder's filler wire and dual wire feeder options are available only if a second wire feeder is connected and in use. The dual wire feed option (WF1+WF2 wire) requires the same filler wire setup in both wire feeders. The currently installed filler wires are defined in "Device settings" on page 82.
Pre gas	0.1 ... 5.0 s, Auto, step 0.1 Default = Auto	Pre gas function starts the shielding gas flow before the laser. This ensures that the metal does not come into contact with air at the start of the weld. Time value is preset by the user. Used for all metals, but especially for stainless steel and aluminum.
Upslope time	0.1 ... 5.0 s, Auto, step 0.1 Default = Auto	Upslope function determines the time during which the welding power gradually increases to the desired welding power level at the start of the weld. The upslope time is preset by the user. Note: With highly reflective materials the risk of reflections is higher during the upslope.
Spot welding	OFF / 0.1 ... 60 s 0.1 ... 3.0 s = step 0.1 3 ... 60 s = step 1	Spot welding function allows welding in predefined weld durations. One weld is one spot. Especially the short spot welds are convenient for tacking parts, for example.
Power	100 ... 3000 W *100 ... 1000 W = step 20* *1000 ... 3000 W = step 50* Default = 500 W	This is the laser power parameter. Laser power can also be adjusted directly in the Home view. The minimum and maximum values can be set for the laser power adjustment. Based on the selected filler wire material and thickness, the laser power setting affects other welding parameters that are set to "Auto". The lower the power, the lower the weld penetration. The higher the power, the higher the weld penetration.
Power min	Default = Predefined minimum for the currently used base settings	
Power max	Default = Predefined maximum for the currently used base settings	

Wire feed speed	20...250 cm/min, Auto *20...100 cm/min = step 1* *100... cm/min = step 5* Default = Predefined according to the currently used base settings	This sets the filler wire feed speed. Once the speed is adjusted to a value other than the default, the user-defined value is always used. In a dual wire feeder setup, the same wire feed speed is applied to both wire feeds. Note: With certain materials, the maximum value can be lower than mentioned here.
Penetration shape	"U", "V" Default = U	Penetration shape selection defines the cross-sectional weld profile. The penetration shape balance can be adjusted with the controllable penetration shape ("V"). In practice, this affects which way the shape is leaning towards. For more information, refer to "Laser penetration" on page 88.
Penetration balance	-5 ... +5	
Wobble width	0.1 ... 5.0 mm, Auto, step 0.1 Default = Auto (Predefined according to the currently used base settings)	The wobble width setting adjusts the width of the wobble effect (oscillation) of the laser beam. The wobble frequency setting defines how fast the laser beam completes one oscillation cycle (i.e. one full wobble pattern) per second. Wobbling helps compensate e.g. for hand movement variations, joint misalignment and inconsistent gaps by spreading energy over a wider area. For more information, refer to "Laser wobble (oscillation)" on page 89.
Wobble frequency	"U": 20 ... 150 Hz, Auto, step 5 "V": 20 ... 110 Hz, Auto, step 5	
PWM	OFF, ON Default = OFF	The PWM (Pulse Width Modulation) function controls the laser power by rapidly switching the laser on and off. The PWM ratio determines the percentage of the time the laser is on (in each on-off cycle). The PWM frequency defines how many on-off cycles the laser completes per second. Note: With very high frequencies the shape of the pulse is different than with the lower frequencies. For more information, refer to "Laser pulse width modulation" on page 90.
PWM ratio	10% ... 99%, Auto Default = Auto	
PWM frequency	15 ... 20000 Hz, Auto Default = Auto	

Downslope time	0.1 ... 0.5 s, Auto, step 0.1 Default = Auto	Downslope time function determines the time during which the welding power gradually decreases to zero at the end of the weld. The downslope time is preset by the user.
Post gas	0.1 ... 10.0 s, Auto, step 0.1 Default = Auto	Post gas function continues the shielding gas flow after the laser has stopped. This ensures that the hot weld does not come into contact with air immediately after welding, protecting the weld. Used for all metals. Especially stainless steel require longer post gas times.
Wire rebound	OFF/ON Default = ON	The wire rebound function automatically retracts the filler wire using the predefined delay, speed and length parameter settings when the welding is stopped. Once retracted, the filler wire is automatically returned back to its initial position. The final positioning can be fine-tuned by adjusting the stick-out length compensation parameter. (If set to 0, then the filler wire is returned to the initial position.) Wire retract delay determines the timespan between the trigger release and the wire rebound sequence start. Wire retract speed determines how fast the filler wire is retracted. The wire rebound function is meant to prevent the filler wire from sticking in the melt pool. The function is on by default.
Wire retract delay	0.00 ... 0.20 s, Auto, step 0.05 Default = Auto	
Wire retract length	1...50 mm, Auto, step 1 Default = Auto	
Wire retract speed	400...1500 cm/min, Auto, step 5 Default = Auto	
Stick-out length compensation	-20...+20 mm, Auto, step 1 Default = Auto	

For more information on the additional welding features and functions, refer to "Additional guidance to functions and features" on page 88.

4.3.4 CLEANING PARAMETERS

The **Cleaning parameters view** lists the available adjustments for the laser cleaning process. This parameter view is available when the operation mode is set to "Cleaning" in the device settings.

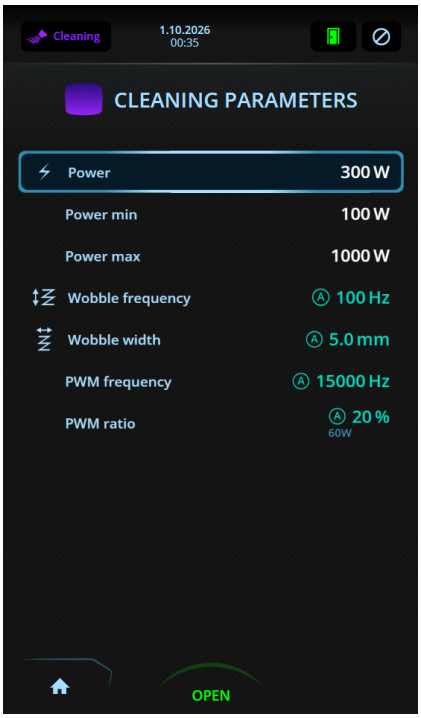

If using the touchscreen, you can select a parameter for adjustment using the on-screen controls. The following steps describe the procedures using the physical controls.

Adjusting welding parameters

1. Turn the control pad's control knob to highlight the desired welding parameter.
2. Press the control knob to select the welding parameter for adjustment.
3. Turn the control knob to adjust welding parameter value.
   >> Depending on the parameter to be adjusted, refer also to the welding parameter table below for more details.
4. Confirm the new value / selection and close the adjustment view by pressing the control knob.

Saving cleaning parameters for later use

A work channel is automatically created for the changed cleaning parameters. To save the set cleaning parameters on a memory channel, do one of the following:

- Quick active channel option: Keep the memory channel button pressed for approximately 2 seconds.
  >> This will save the parameter settings onto the currently active channel replacing its previous parameter settings.
- Memory channels view option: Go to the memory channels view and save the parameter settings onto a new channel.
  >> Refer to "Memory channels" on page 71 for more information.

Cleaning parameters and feature descriptions

The cleaning parameters that have the "Auto" setting as an option, and when the "Auto" setting is used, those cleaning parameters are adjusted automatically based on the power setting.

Parameter	Parameter value	Description

Power	300 ... 1000 W, step 20	This is the power parameter that affects the cleaning depth. Laser power can also be adjusted directly in the Home view. The minimum and maximum values can be set for the laser power adjustment.
Power min	Default = Predefined minimum for the currently used base settings	
Power max	Default = Predefined maximum for the currently used base settings	
Wobble width	0.1 ... 5.0 mm Default = 3.0 mm	This adjusts the width of the wobble effect (oscillation) of the laser beam. Wobbling is implemented optically without moving the whole welding head.
Wobble frequency	20 ... 150 Hz, Auto	This defines how fast the laser beam completes one oscillation cycle (one full wobble pattern) per second.
PWM ratio	10% ... 99%, Auto	In the cleaning mode, the pulse width modulation (PWM) function is always on, controlling the laser power by rapidly switching the laser on and off. The PWM duty cycle determines the percentage of the time the laser is on (in each on-off cycle). I.e. 99% means that the laser is almost always on, 50% means that the laser is on half the time.
PWM frequency	5 ... 20000 Hz, Auto Default = Auto	The PWM frequency defines how many on-off cycles the laser completes per second when PWM is on. In cleaning, higher frequencies are more effective.

4.3.5 WELD ASSIST

Weld Assist is a wizard-like utility for easy selection of welding parameters. The utility walks the user through the selection of required parameters step by step, and provides its recommendations for the welding job at hand.

You can go back to the previous steps in Weld Assist by pressing the left selection/function button, or by selecting "Back" on the touchscreen.

1. To start, go to the **Weld Assist** view and select "Start".

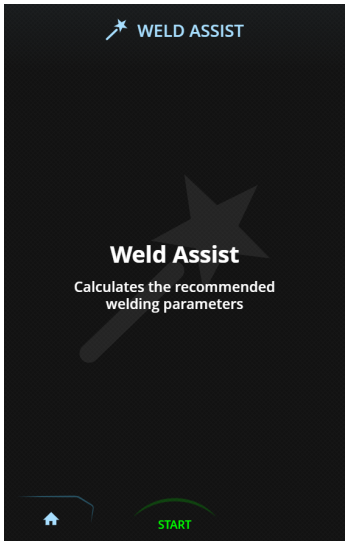

2. Select:
   >> The work piece material: Al (aluminum) / Fe (carbon steel) / Ss (stainless steel).
   >> The plate thickness: 1...6 mm.
   >> The joint type: butt joint / corner joint / edge joint / lap joint / T-joint.
   >> Welding position: PG / PA / PB / PC / PD / PE / PF.
   >> Filler wire type (based on the material selection).

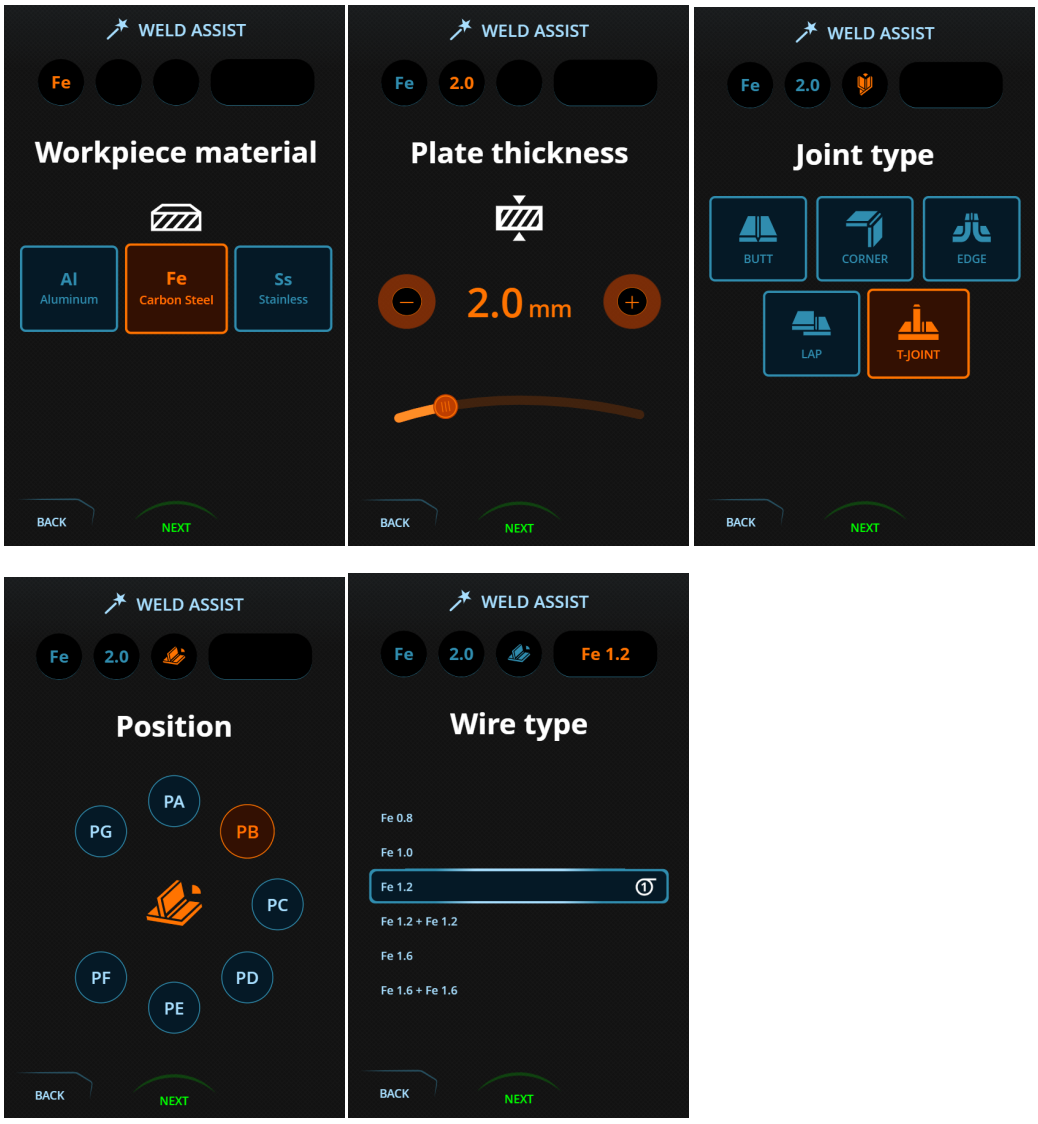

The filler wire type selection in Weld Assist also shows which filler wire is currently installed and defined in the settings, if the work piece material and the installed filler wire material align.

3. Weld Assist gives you a recommendation for the main welding parameters. Select "Next" to continue with the recommended parameter values.

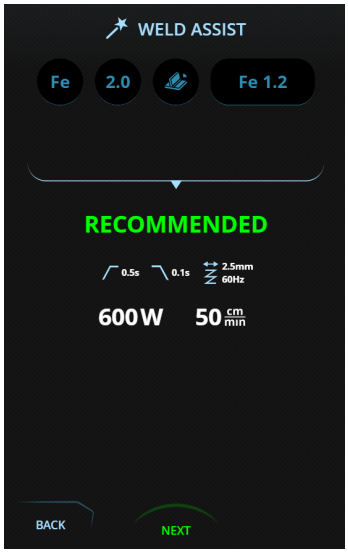

4. Enter a name for the set of welding parameters, and continue to channel saving by selecting "Next".



5. Select the memory channel slot for saving.



6. Once saved, the memory channel can be taken into use by selecting the memory channel in the **Memory channels** view.

The welding parameters created with Weld Assist are still adjustable as per normal.

4.3.6 DEVICE SETTINGS



Changing settings

1. Turn the control knob to highlight the desired settings parameter.
2. Press the control knob to select the settings parameter for adjustment.
3. Turn the control knob to select the settings value.
   >> Depending on the settings parameter to be adjusted, refer also to the Settings table below for more details.
4. Confirm the new value / selection and close the adjustment view by pressing the control knob.

Settings

Parameter	Parameter value	Description
Operation mode	Welding / Cleaning	The FastBeam laser welding system has two operation modes, welding and cleaning. Welding mode is used for all laser welding applications, and the cleaning mode is used for cleaning the weld with the laser. For more information on cleaning, refer to "Cleaning with laser" on page 97. Note: The different operation modes have their own set of memory channels.
Wire feeder 1: wire type	No wire / *Selected wire*	This wire feeder settings parameter is available if the wire feeder 1 is connected ("connected" or "not connected" is indicated in the view). The wire type is selected from a list of supported filler wires. The "no wire" option can be selected manually if you want to weld without filler wire.
Wire feeder 2: wire type	No wire / *Selected wire*	This wire feeder settings parameter is available if the wire feeder 2 is connected ("connected" or "not connected" is indicated in the view). The wire type is selected from a list of supported filler wires. The "no wire" option can be selected manually if you want to weld without filler wire.
Language	*Available languages*	This allows the user to select the control panel language from a list of available languages.
Show weld data	OFF / 1...10 s / ON	This defines if and how long the weld data summary is shown after each weld. When set to ON, the weld data is shown until the user closes the view manually.
Display brightness	10...100 Default = 50	The control panel display brightness.

Display off time	OFF / 1...120 min Default = 30 min	The control panel display is turned off after the set time period. The control knob light is lit when the display is off, but ControlPad (and the system) is still on.
Date	>>>>	Date setting.
Time	>>>>	Time setting.
Nozzle contact cut-off delay	1...300 ms Default in welding = 10 ms Default in cleaning = 100 ms	This settings parameter defines the delay before the system cuts off the power when the contact between the welding torch and the workpiece is lost.
Laser center offset	-10.0 ... +10.0 mm (left ↔ right), step 0.1	The laser center offset setting adjusts the laser beam position in the left-to-right direction. This adjustment may be required when the welding nozzle (or the welding torch) is replaced.
Automatic saving	OFF / ON Default OFF	When OFF, the user can manually save the changes to memory channels. When ON, the memory channel updates (saves) automatically whenever a parameter value changes.
Factory reset	>>>>	This opens a factory reset dialog to reset the equipment to factory settings. Refer to "Factory reset" below for more information.

4.3.7 FACTORY RESET

The factory reset function can be accessed in the device settings view (refer to "Device settings" on page 82 for more information).

The factory reset function returns the selected equipment settings into the factory defaults and erases the selected user data.

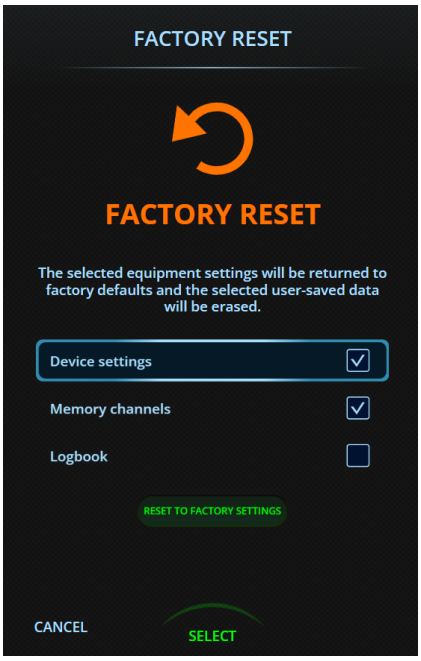

To perform a factory reset, proceed as follows:

1. In the device settings, select **Factory reset**.
2. Choose which settings and data you want to reset (e.g. device settings, memory channels, logbook).
3. Once ready to proceed, select **Reset to factory settings**.

The default reset operation does not fully erase the logbook events. They remain hidden and can still be accessed by the Kemppi service.

This operation changes the language selection to English.

4.3.8 LOGBOOK

The **Logbook view** saves information on the device usage and different events:

- Welds
- Memory channel changes
- Warnings and errors
- Installed software updates
- Other device events.



The logbook events can be filtered by their categories by pressing "Filter" in the bottom right corner (or the right function button) and selecting the filter(s). By default, all events are listed by their date and time.

4.3.9 INFO AND STATUS VIEWS

Info view

The **Info view** shows information on the device usage.

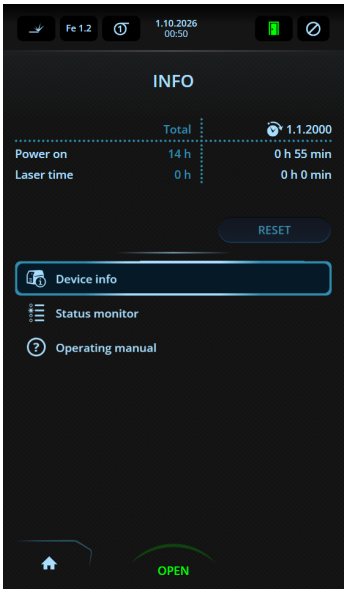

The time counter can be reset by selecting "Reset".

Status monitor

Through the **Info view** it is also possible to access the device info (e.g. software version and equipment serial numbers) and the status monitor.

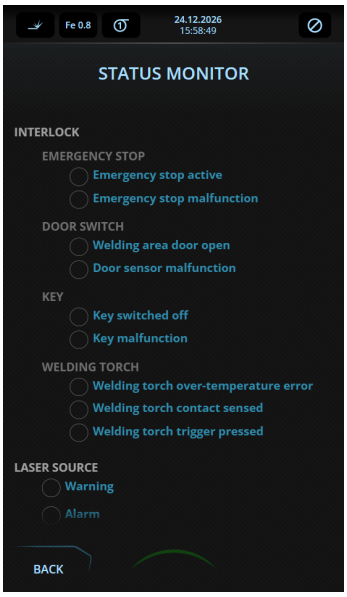

The status monitor view provides a summary of the different device statuses and signals from internal or external sources that affect the device operation.

Help view

The help view is also accessible via the **Info view**. In the help view you can find a web address and a QR-code to gain access to the online product information (e.g. operating manual).

Status bar

The following statuses are shown as symbols in the top status bar (visible in every control pad view):

Symbol	Description	Symbol	Description
	Welding mode		Laser welding area door open*
	Cleaning mode		Laser welding area door open (laser enabled)*
	Wire feeder 1 enabled		Laser welding area door closed
	Wire feeder 2 enabled		Laser disabled (locked)*
	System error*		Laser enabled (unlocked)
	System warning		Ready to weld
			Emergency stop pressed*

** Welding is not possible when this status is on.*

4.4 ADDITIONAL GUIDANCE TO FUNCTIONS AND FEATURES

This section further describes some of the FastBeam 3 functions and features and how to use them.

4.4.1 LASER PENETRATION



The penetration shape can be selected between the default U-shape and a more focused controllable shape (in the **Welding parameters** view). This selection defines the cross-sectional weld profile, i.e. how laser output's power characteristics are used in the weld.

In addition to the penetration shape selection itself, the final penetration shape is also dependent on the wobble (oscillation) effect. Refer to "Laser wobble (oscillation)" on the next page for more information on adjusting the wobble parameters.

U-shape (default)

The U-shaped penetration provides an even, normal, penetration across the wobbling width. U-shape is the default laser weld penetration shape for the majority of laser welding applications.

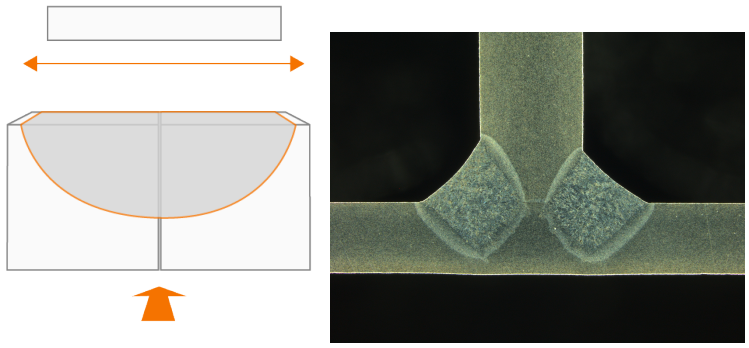

Controllable shape

The controllable penetration shape (sometimes referred to as a guided V-shape) provides a more focused penetration. The laser energy is concentrated towards the center/root of the weld.

With this penetration option, the penetration shape balance can be adjusted. In practice, this affects which way the shape is laterally "leaning" or pointing towards.

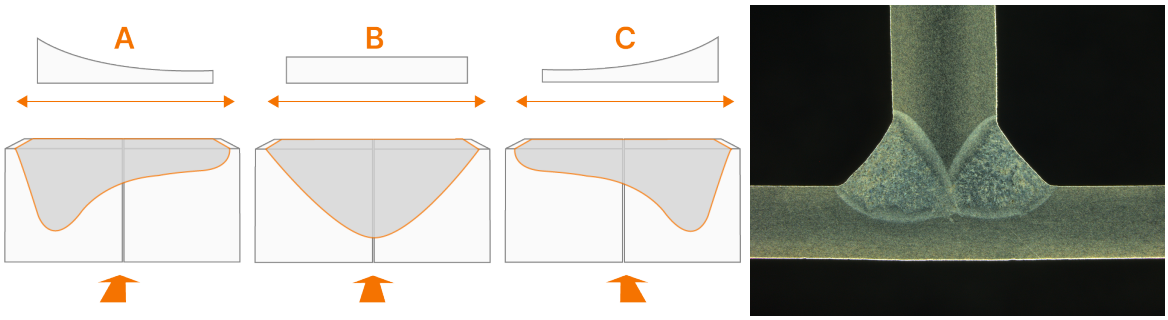

A. Power balance to the left

B. Power balance in the middle
C. Power balance to the right.

Keyhole principle

When the focused laser beam heats the metal to the point of vaporization, the resulting metal vapor pushes molten material aside and creates a small, elongated cavity. This is called a "keyhole". The keyhole travels with the laser beam, acting like a tunnel for the beam.

The laser beam then penetrates deep into this keyhole cavity, delivering energy below the material surface. As the beam moves forward, the molten metal behind it solidifies forming a deep, narrow weld. Therefore, the keyhole exists only during welding.

4.4.2 LASER WOBBLE (OSCILLATION)

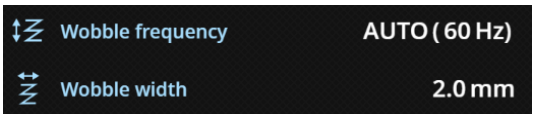

The laser wobble function is controlled oscillation of the laser beam across the welding direction. It is produced by the welding head optics in a programmed motion (not manually by hand). The adjustment options for the laser wobble are *Wobble frequency* and *Wobble width* (in the **Welding parameters** view).

In practice, instead of moving in a straight line, the laser spot follows a small, rapid side-to-side pattern, creating a wider effective weld zone distributing energy across the weld pool.

Wobble frequency setting defines how many oscillation cycles (full wobble patterns) the laser beam completes per second (A). The higher the welding speed is, the higher the frequency should be set when pursuing a uniform weld bead.

Wobble width setting adjusts the width of the wobble effect of the laser beam (B).

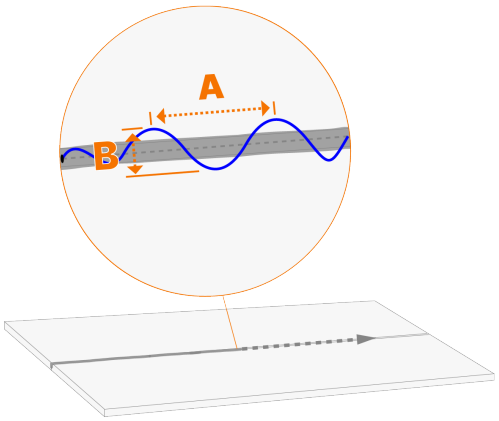

The wobble function cannot be turned fully off. In use cases where the wobble effect is not desired, the wobble width is recommended to be set to its smallest setting (0.1 mm).

Too high wobble width and frequency settings may affect the keyhole stability negatively. The localized power density doesn't necessarily reach the threshold needed to create and sustain a vapor cavity.

4.4.3 LASER PULSE WIDTH MODULATION

Most of the control in handheld laser welding is typically achieved through power, travel speed, wobble and focus position. Pulse width modulation (PWM) is a feature for specialized applications. By default, with FastBeam 3, PWM is enabled and used in the cleaning mode.

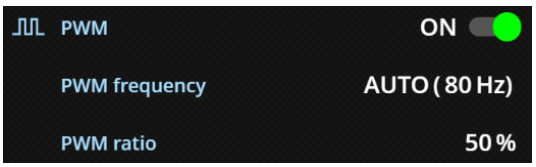

PWM (Pulse Width Modulation) controls the average heat input by rapidly switching the laser on and off at high frequency. By adjusting the duty cycle (ratio), it effectively fine-tunes penetration, heat accumulation, and process stability.

The adjustment options for the pulse width modulation are *PWM frequency* and *PWM ratio*.

The PWM ratio determines the percentage of the time the laser is on (in each on-off cycle). I.e. 99% means that the laser is almost always on, 50% means that the laser is on half the time. The PWM frequency defines how many on-off cycles the laser completes per second when PWM is on.

The following illustrative graphic shows a few examples on how the PWM adjustments affect the laser beam:

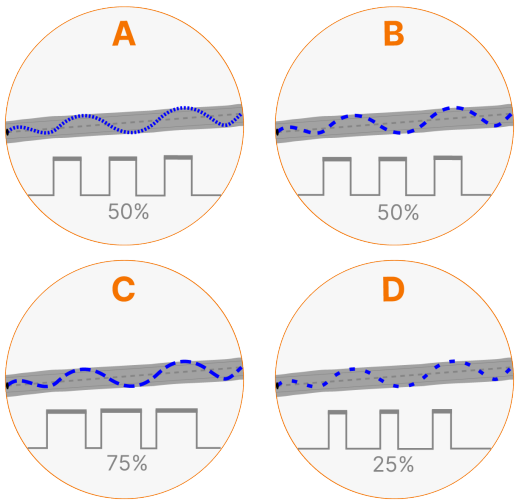

A. High PWM frequency, 50% ratio
B. Medium PWM frequency, 50% ratio
C. Medium-low PWM frequency, 75% ratio
D. Low PWM frequency, 25% ratio.

In practice, high PWM frequency and low PWM ratio result in smooth, controlled heating, and low PWM frequency and same PWM ratio result in more pulsed, uneven heating.

The possibility to limit the heat input more efficiently and to reduce the excessive melting and deformation makes the PWM feature especially useful in the cleaning operations.

A high PWM frequency combined with a low PWM ratio setting can reduce the achievable peak power.

4.4.4 USB UPDATE

The FastBeam 3 software can be updated (when a newer version is available) using a USB memory stick.

There can be only one ZIP file on the USB memory stick inserted into the welding system at once. This ZIP file must be a dedicated software update pack for this welding system.

The USB memory stick must be formatted to use FAT/FAT32 file system.

For more information on software updates and their availability, contact your local Kemppi representative.

To update the software, follow these steps:

1. Ensure you have the correct software ZIP package saved on your computer for the welding equipment in question.
2. Connect the USB memory stick to the computer.
3. Copy the new software ZIP file into the memory stick's root folder and remove the memory stick from the computer.
4. Turn the laser welding equipment power on.
   >> Wait until the control pad user interface has fully started.
5. Connect the USB memory stick to the FastBeam control pad's USB connector and wait until the system finishes reading the USB memory stick.

Do not remove the USB memory stick during the update process. The control pad will show a notification when the update is ready and the USB memory stick can be removed.

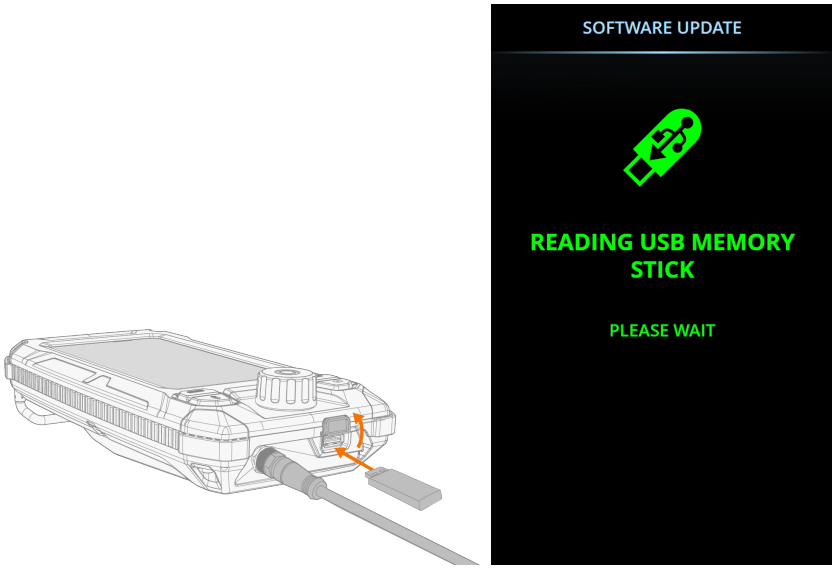

6. When prompted, choose to install the software found on the USB memory stick.
   >> The control panel shows the update progress percentage as well as the software being updated.
   >> Once the update is completed, the welding equipment restarts automatically.

If the software version on the USB memory stick is older than the currently installed version, you can choose to downgrade to the older version, or skip the update.

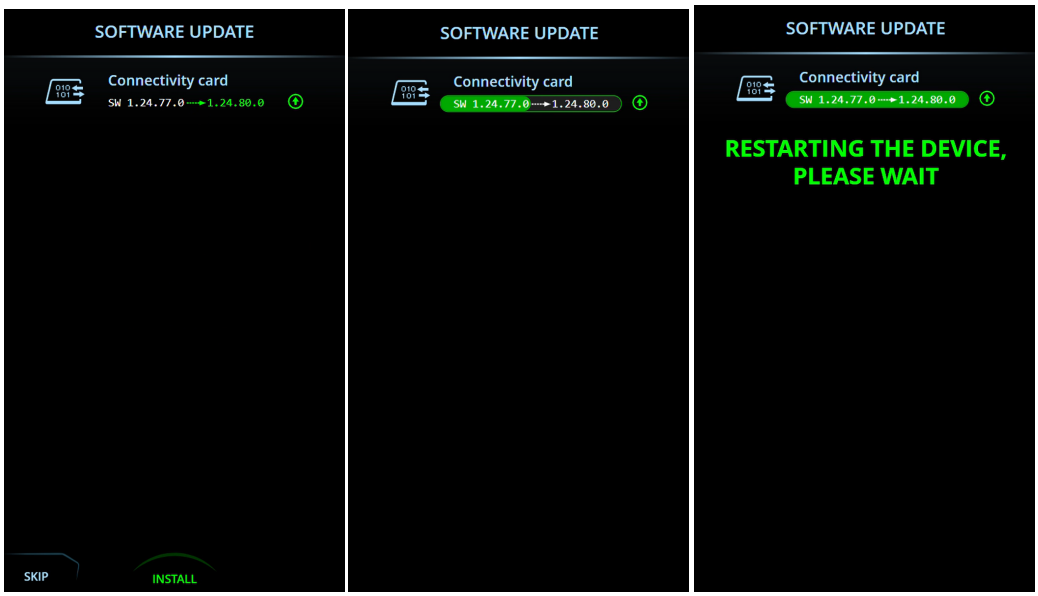

7. Once the welding system has rebooted and the control pad user interface indicates that the update is ready, remove the USB memory stick from the control pad.

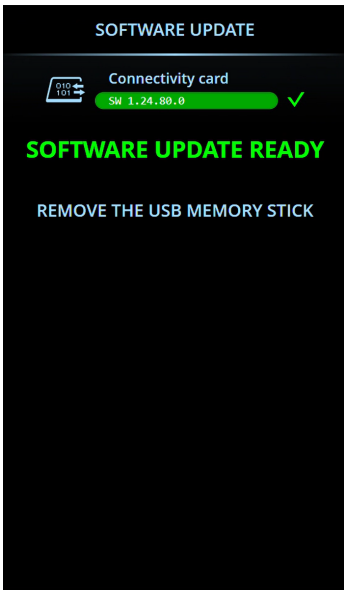

4.5 WELDING WITH LASER

This chapter describes the basic welding steps with FastBeam 3 laser equipment. Before commencing, ensure you have read and understood all the safety requirements in this operating manual and in the safety instructions. Any laser welding operation must be carried out in a laser-controlled area. Also ensure that you are wearing all of the required personal protective equipment, including the laser safety goggles.



The laser welding torch travels into the pulling direction, moved by the filler wire that is fed into the weld. When welding, keep the laser welding torch always in a safe angle (70° to 30°) to the pulling direction, so that the laser beam and the potential reflections are always directed away from you.

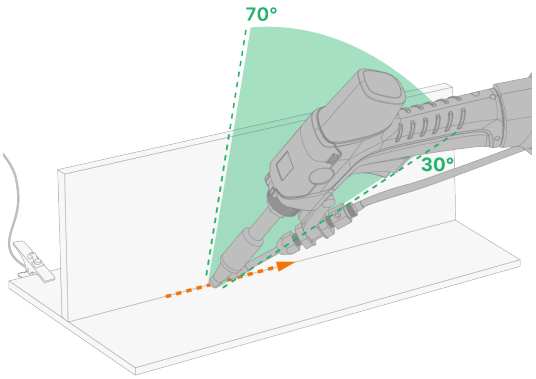

The laser beam can reflect from different metal surfaces, and the reflections can also cause damage or injuries. Do not use the laser welding torch close to a 90 degree angle towards the weld piece surface to avoid the laser beam reflecting straight back to the welding torch or to the welder holding the welding torch. Also due to the reflection hazard, using the laser welding torch close to a 0° angle (almost flat) towards the work piece is also prohibited.

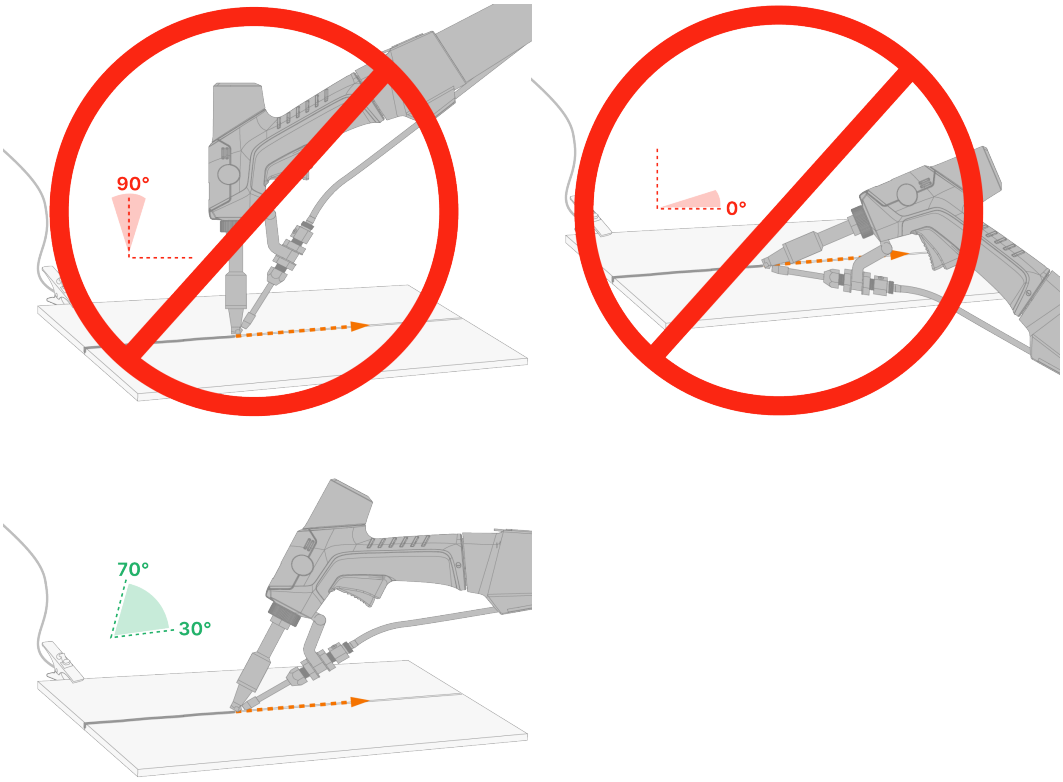

The most reflective materials from the laser welding point of view are aluminum and aluminum alloys, and copper and copper alloys (e.g. brass, bronze). Also any mirror-like finish in the work piece or highly polished metal (e.g. stainless steel, nickel coatings) can increase the risk of reflections.

To reduce the risk of reflection effects during welding, always be aware of the welding angle and consider where any reflections may be directed.

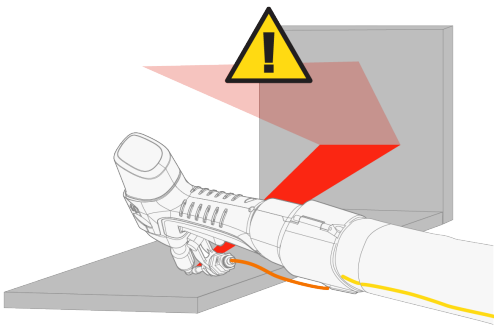

Never point the laser welding torch (laser outlet) towards the human body, the eyes, or flammable materials when the power is on.

Do not place your hand or any other part of your body behind the workpiece when welding. The laser beam may penetrate the workpiece.

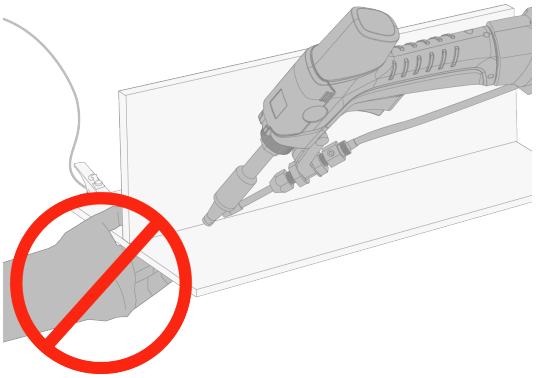

The laser welding torch includes a low-power guide laser ("pilot laser") that indicates the position of the welding beam and assists in workpiece alignment before and during welding. The guide laser does not contribute to the welding process, but the same laser safety precautions apply.

Welding steps:

1. Adjust the welding parameters and settings according to your welding application.
   >> Refer to "Welding parameters" on page 72 and "Device settings" on page 82.
2. Connect the safety contact clamp to the workpiece.



3. Check your surroundings. Ensure no one is in front of or in the line of sight of the laser beam.
4. Position yourself so that the laser beam is always pointing away from you, and that the laser welding torch angle is within the before-mentioned boundaries.

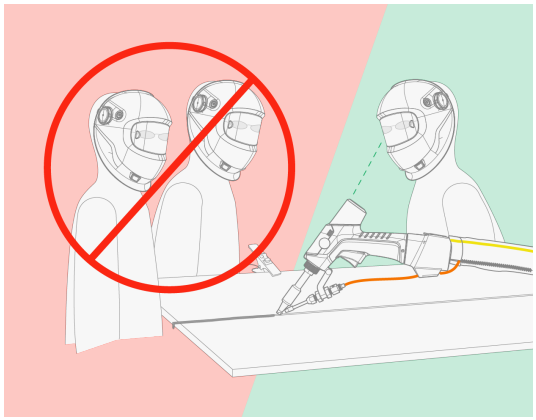

5. Place the laser welding torch head against the workpiece. Observe the guide laser for correct positioning.

If the welding has not been started in approx. 5 seconds after the contact to the workpiece has been established, the FastBeam 3 laser welding machine returns to standby and the contact to the workpiece must be reinstated to start or continue welding.

6. Press the laser welding torch trigger.
   >> This engages the laser beam.
   >> When filler wire is used, this also starts the wire feed.
7. If using filler wire: Assisting with a slight manual pulling force, let the wire feed motion move the laser welding torch into the pulling direction.
8. If no filler wire used: Move the laser welding torch manually.

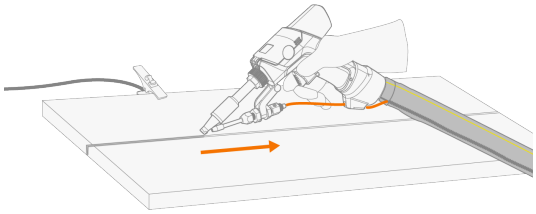

Cold wire inch with trigger

With FastBeam 3 and CoolFeed 300, the filler wire can be inched forward and backward using only the welding torch trigger when the safety contact has not been established.

For safe operation and use of this wire feed feature, the laser welding torch nozzle, wire guide nozzle or filler wire must not touch the workpiece and the safety contact must not be established.

To inch the filler wire forward:

1. Ensure that you're pointing into a safe direction with the laser welding torch.
2. Without touching the workpiece, press the laser welding torch trigger and keep it pressed as long as you wish to drive the wire forward.

To inch the filler wire backward (filler wire reverse):

3. Ensure that the laser welding torch or the filler wire aren't in contact with the work piece, and you're pointing into a safe direction with the laser welding torch.
4. Press the welding torch trigger twice and keep it pressed as long as you wish to drive the wire backward.

4.6 CLEANING WITH LASER

This chapter describes the basic weld cleaning steps with FastBeam 3 laser equipment. Before commencing, ensure you have read and understood all the safety requirements in this operating manual and in the safety instructions. Any laser welding operation must be carried out in a laser-controlled area. Also ensure that you are wearing all of the required personal protective equipment, including the laser safety goggles.



Weld cleaning can be used to remove e.g. surface oxides from a finished weld, or to prepare the weld seam for welding.

Use the AS-12D copper nozzle with the FastBeam 3's laser welding torch for the weld cleaning operation. On the control pad, set the power and adjust the other available settings in the cleaning parameters view ("Cleaning parameters" on page 76).

In general, cleaning is consistent with the welding steps, but the laser welding torch must be moved manually (no filler wire pushing the welding torch) to clean the weld. Use pulling motion (preferred) and keep the laser welding torch always in a safe angle (70° to 30°) to the pulling direction, so that the laser beam and the potential reflections are always directed away from you.

The contact to the workpiece is always required. FastBeam 3 is not suitable for remote cleaning.

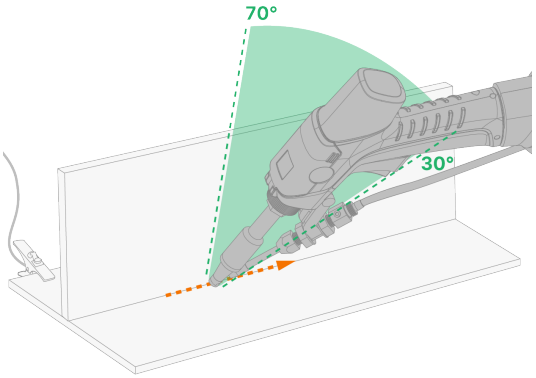

The laser beam can reflect from different metal surfaces, and the reflections can also cause damage or injuries. Do not use the laser welding torch close to a 90 degree angle towards the weld piece surface to avoid the laser beam reflecting straight back to the welding torch or to the welder holding the welding torch. Also due to the reflection hazard, using the laser welding torch close to a 0° angle (almost flat) towards the work piece is also prohibited.

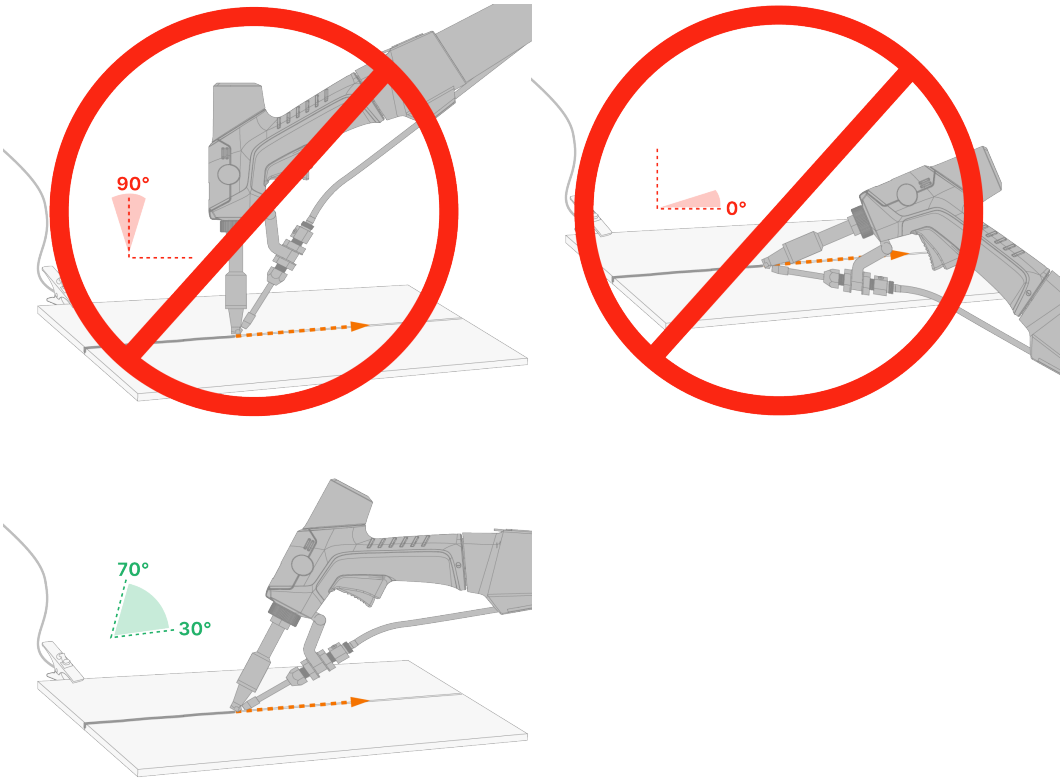

The laser welding torch includes a low-power guide laser ("pilot laser") that indicates the position of the welding beam and assists in workpiece alignment before and during welding. The guide laser does not contribute to the welding process, but the same laser safety precautions apply.

Cleaning steps:

Retract the filler wire and adjust the filler wire guide nozzle so that they don't interfere with the cleaning operation.

1. Install a welding nozzle compatible with the cleaning process into the laser welding torch.
   >> E.g., the AS-12D copper nozzle is suitable for cleaning operation due to its bigger aperture.
2. Adjust the cleaning parameters and settings according to your cleaning application.
   >> Refer to "Cleaning parameters" on page 76 and "Device settings" on page 82.
3. Connect the safety contact clamp to the workpiece.



4. Check your surroundings. Ensure no one is in front of or in the line of sight of the laser beam.
5. Position yourself so that the laser beam is always pointing away from you, and that the laser welding torch angle is within the before-mentioned boundaries.

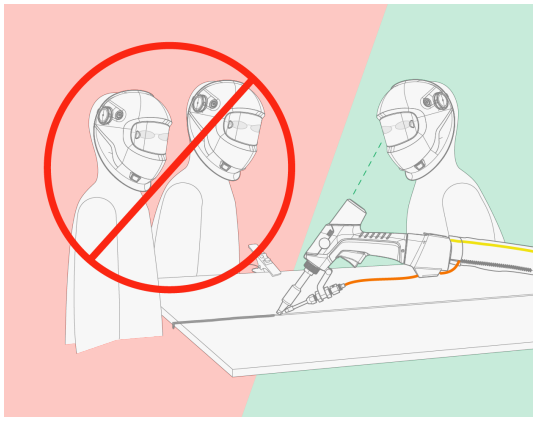

6. Place the laser welding torch head (welding nozzle) against the workpiece. Observe the guide laser for correct positioning.

If the cleaning operation has not been started in approx. 5 seconds after the contact to the work piece has been established, the FastBeam 3 laser welding machine returns to standby and the contact to the workpiece must be reinstated to start or continue cleaning operation.

7. Press the laser welding torch trigger.

   >> This engages the laser beam.

8. Move the laser welding torch along the weld seam.

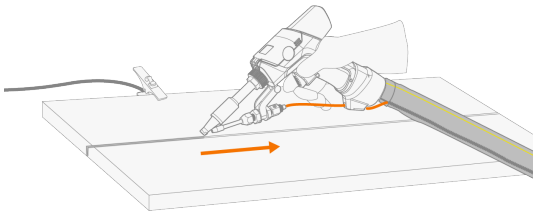

5. MAINTENANCE

The welding machine should undergo regular maintenance to prevent malfunction and potential hazards. Only trained professionals with proper safety equipment may perform maintenance and repairs.

Power off and lock the machine before performing maintenance.

5.1 DAILY, PERIODIC AND ANNUAL MAINTENANCE

When considering and planning routine maintenance, consider the operating frequency of the welding system and the working environment.

Correct operation of the welding machine, regular maintenance, and the use of original Kemppi spare parts and consumables help you avoid unnecessary downtime and equipment failure, while also maximizing the equipment's service life.

For repairs, find your closest Kemppi service workshop at www.kemppi.com or contact your dealer.

For the cooling unit's (chiller) maintenance actions, refer also to the chiller manufacturer's instructions.

Only an authorized electrician is allowed to carry out electrical work.

Only qualified service personnel is allowed to carry out periodic and annual maintenance.

Disconnect the power source from the mains before handling electrical cables and connectors.

Do not use pressure washing devices to clean the equipment.

Ensure a clean and dust-free environment, especially for the laser welding torch and optical fiber head maintenance.

Where applicable, use the correct tension torque when fastening loose parts.

If the equipment is left turned off and unused for a longer period, especially in below +5 °C temperatures, the cooling system must be drained completely.

Daily maintenance

Welding equipment's daily maintenance:

- Perform a gas test to check the shielding gas flow and that the gas supply works as per normal.
- Make sure the outer protective lens is clean. Replace the lens when necessary.
- Make sure that the QBH connectors are properly tightened. The cooling connector (of the QBH) must be well connected to avoid water leakage. If water enters the QBH, stop using the equipment immediately and contact your local Kemppi dealer or service workshop for repairs.
- Make sure the welding nozzle is not blocked and that the nozzle has normal conduction with the safety contact.
- Make sure the coolant circulation is working normally.
- Make sure the water and gas connections are correct.
- Check that all covers and components are intact.
- Check all the cables, hoses and connectors. Do not use them if they are damaged.
- Ensure that the connectors are correctly fastened. Loose connectors can impair welding performance and damage connectors.
- Check the wire feeder's feed rolls and the pressure handle mechanism.

Weekly maintenance

Welding equipment's weekly maintenance:

- Clean the outside parts of the units from dust and dirt, for example, with a soft brush and vacuum cleaner. Do not use compressed air, there is a risk that the dirt will compact even more tightly into the gaps.

Periodic maintenance

Welding equipment's periodic maintenance, every 1–6 months:

- Check the electrical connectors of the equipment at least every 6 months. Clean oxidized parts and tighten loose connectors.
- Update the welding system to the latest firmware and software versions, as applicable.
- Check the cooling liquid quality at least once a month. Ensure that the liquid is clear and free of any visible impurities.
- Clean the cooling unit filter and replace the cooling liquid every 3 months.

Annual maintenance

The annual maintenance must be carried out by an authorized Kemppi service workshop. Kemppi service workshops complete the welding system maintenance according to your Kemppi service agreement. Find your closest service workshop at www.kemppi.com.

Welding equipment's annual maintenance program includes:

- Cleaning the equipment.
- Maintenance of the welding tools.
- Checking the connectors and switches.
- Checking all electrical connections.
- Checking the power source mains cable and plug.
- Repairing defective parts and replacing defective components.
- Maintenance test.
- Testing the operation and calibrating the performance values when needed.
- Updating the welding system to the latest firmware and software versions, and installing new welding software.

Laser welding torch and optical fiber head maintenance guidelines (authorized Kemppi service workshop only!):

- All laser circuit devices mounted in the laser welding torch must be cleaned thoroughly.
- The components must be replaced in a clean and dust-free place, and the welding torch must be protected from dust and dirt during maintenance. Protect also the connection between the QBH and the laser welding torch from dust and dirt.
- Prepare the new lens components before removing the old ones.
- Use original manufacturer lens components.
- If the replacement lens is not available immediately, it is recommended to seal the opening with non-stick protective film when the lens is removed.

5.2 LASER WELDING TORCH PROTECTIVE LENS CHECK AND REPLACEMENT

The protective lens inside the laser welding torch must be checked regularly and replaced as necessary.

⚠ *Perform this operation in a clean and dust-free area. Any laser optics' contamination, scratches or thermal damage can affect the laser beam, degrade the weld quality and potentially damage the system.*

ⓘ *Ensure that the welding equipment is turned off for the operation.*

ⓘ *If the laser welding torch's existing protective lens is clean and clear, replacement is not needed. Therefore, do not remove the replacement lens from its packaging before the check is completed and the need for replacement is confirmed.*

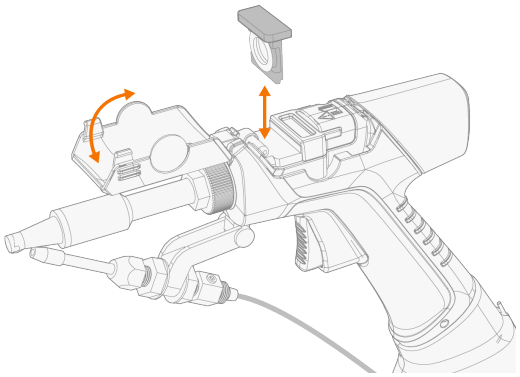

1. Open the lens compartment cover.
2. Take out the protective lens tray.

⚠ *Ensure that no impurities, dust or other contaminants can enter the lens compartment.*

>> Without touching or removing the lens itself, observe the lens for any damages or impurities. If it is clean and clear, you can continue using it (jump to step 5).

3. Remove the old lens.

>> To remove the old lens, turn it to release it.

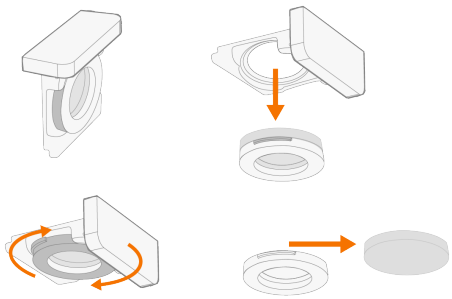

4. Install the new lens.

⚠ *Do not touch the lens surface and use clean optical handling gloves for this operation. Handling the lens without caution and touching its surface with bare hands may transfer impurities and contaminants onto the lens.*

>> To secure the new lens, first place it in its slot, and then turn it.

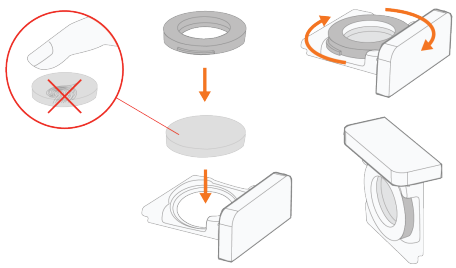

5. Install the protective lens tray back into the laser welding torch.
   >> Ensure that the lens and tray are placed the right way: The protective lens tray's top part has rounded edges in the front (towards the welding head).
6. Close the lens compartment cover.

5.3 TROUBLESHOOTING

The problems listed and the possible causes are not definitive, but suggest some typical situations that may turn up during normal use of the welding system.

If there are any unknown faults or incidents, power off the equipment immediately and contact your local Kemppi dealer or service workshop.

If the problem persists, power off the equipment immediately and contact your local Kemppi dealer or service workshop.

Laser welding system:

Problem	Recommended actions
The welding system does not power up	Check that the mains cable is plugged in properly.
	Check that the mains switch of the power source is at the ON position.
	Check that the mains power distribution is on.
	Check the mains fuse and/or the circuit breaker.
	Check that the control cable between the power source and the wire feeder is intact and properly attached. Check also the control pad cable.
The laser output fails	Check the safety contact and the laser welding torch to ensure that the connection is normal. Check the laser device, laser-controlled area's safety systems and cooling system for any errors.
The laser energy is low	Check if the protective lens is damaged, if the laser power setting is too low, or if the laser focus has offset.
The swing motor in the laser welding torch works abnormally, and the pilot light has offset	Try making fine adjustment on the laser center offset (left/right) in the settings.

Wire feeder:

Problem	Recommended actions
The wire feeder does not feed the filler wire	Check that the filler wire has not run out.
	Check that the filler wire is properly routed through the feed rolls to the wire liner.
	Check that the pressure handle is properly closed.
	Check that the feed roll pressure is adjusted correctly for the filler wire.
	Blow compressed air through the wire liner to check that it is not blocked.

Weld quality:

Problem	Recommended actions

Dirty and/or poor quality weld	Check that the shielding gas has not run out.
	Check that the shielding gas flow is unobstructed.
	Check that the gas type is correct for the application.
	Check that the welding parameter settings are correct for the application.
Varying welding performance	Check that the wire feed mechanism is adjusted properly.
	Blow compressed air through the wire liner to check that it is not blocked.
	Check that the wire liner is correct for the selected wire size and type.
	Check the welding torch's nozzles (welding nozzle and wire nozzle), their size, type and wear.
	Check that the welding torch is not overheating.
	Check that the safety contact clamp is properly attached to a clean surface of the workpiece.
High spatter volume	Check the welding parameter values and welding procedure.
	Check the gas type and flow.
	Check that the filler wire is correct for the current application.

"Error codes" on the next page

5.4 ERROR CODES

In error situations, the control panel displays the number of the error. Refer to the table below for more information on the error situation.

All error states require prioritizing the investigation of safety hazards. It is strictly prohibited to force a reset or resume operations before confirming that the fault has been eliminated. After resolving the issue, the equipment must be confirmed to have returned to normal operational status via a reset operation before restarting the work.

General error codes:

Code	Title	Possible cause	Proposed action
1	Power source not calibrated	Power source calibration has been lost.	Restart the power source. If problem persists, contact Kemppi service.
2	Too low mains voltage	Voltage in mains network is too low.	Restart the power source. If problem persists, contact Kemppi service.
3	Too high mains voltage	Voltage in mains network is too high.	Restart the power source. If problem persists, contact Kemppi service.
5	Internal 24V voltage is too low	Power source contains an inoperative 24V power supply unit .	Restart the power source. If problem persists, contact Kemppi service.
7	Wire feeder not found	Wire feeder is not connected to power source or connection is faulty.	Check the control cable and its connectors.
43	Overcurrent in wire feeder motor	There may be too much pressure in the wire feed rolls or dirt in the wire line.	Adjust the feed roll pressure. Clean the wire line and replace worn parts.
45	Low shielding gas pressure	Too low gas pressure or missing gas.	Check gas line connections.
46	Overheated welding torch	The welding torch is overheated.	Wait for the welding torch to cool down. *Check the protective lens in the welding torch. Check the cooling liquid level in the cooling unit and that the liquid is circulating normally. If problem persists, contact Kemppi service.*
91	Internal laser source error	There is an internal error in the laser source. Welding is stopped.	Check the status monitoring view for the possible cause. Restart the welding system. If problem persists, contact Kemppi service. *The laser module errors are also described below.*
92	Internal laser source warning	There is an internal warning in the laser source.	Check the status monitoring view for the possible cause. Restart the welding system. If problem persists, contact Kemppi service. *The laser module errors are also described below.*

93	Welding torch scanning mirror fault	There is a problem with the welding torch's internal scanning mirror controls.	Check the connections to the laser power source and ensure that the welding torch cabling is intact. Restart the laser power source. If the problem persists, contact Kemppi service.
94	Laser module off	The laser module is not powered on.	Check that the laser module's circuit breaker is on. If it is off, turn it on. If the problem persists, contact Kemppi service.
95	Laser beam not generated	The laser beam did not turn on.	Try again. If the problem persists, contact Kemppi service.
178	Laser-controlled area door open	The door to the laser-controlled area has been opened.	Close the door to the laser-controlled area.
179	Stop switch pressed	Welding system has been stopped because the stop switch is pressed.	Release the stop switch.
180	Internal safety system malfunction	A malfunction has been detected in the safety system.	Check the status monitoring view for the possible cause. Ensure that all the safety features are connected and operational. Restart the welding system. If problem persists, contact Kemppi service.
244	Internal memory failure	Initialization failed.	Restart welding system. If problem persists, contact Kemppi service.
250	Internal memory failure	Memory communication failed.	Restart welding system. If problem persists, contact Kemppi service.

Laser module error codes:

Code	Description	Error level	Effect / Proposed action
1002	Fiber optic cable broken or disconnected	Alarm (operation is stopped)	Ensure that the cable is properly connected and reset laser. If the alarm persists, contact Kemppi service.
1003	Interlock 1 open	Warning (operation is stopped)	Close interlock and clear alarms / reset laser.
1004	Interlock 2 open	Warning (operation is stopped)	Close interlock and clear alarms / reset laser.
1005	Output power too high	Alarm (operation is stopped)	Ensure that the reflected power is not too high. If the alarm persists, restart laser.
1006	Output power too low	Warning	Ensure that the reflected power is not too low. If the alarm persists, restart laser.
1007	Safe operating area	Warning	Laser output power may be reduced due to warning. If the warning persists, contact Kemppi service.
1008	Power supply alarm	Alarm (operation is stopped)	Restart laser. If the alarm persists, contact Kemppi service.
1009	Pump current too high	Warning	Laser output power may be reduced due to warning. If the warning persists, contact Kemppi service.

1010	Back reflection too high	Alarm (operation is stopped)	Ensure that the reflected power from the target is not too high. Clear alarms / reset laser.
1011	Laser power unstable	Warning	Ensure that the reflected power from the target is not too high. If the warning persists, restart laser.
1012	Ambient temperature high	Alarm	Use the laser equipment only in the specified conditions. Clear alarms / reset laser.
1013	Ambient temperature low	Warning	Use the laser equipment only in the specified conditions. Clear alarms / reset laser.
1014	Water outlet temperature exceeded	Alarm	Use the laser equipment only in the specified conditions. Clear alarms / reset laser.
1015	Optical failure	Alarm	Restart laser. If the alarm persists, contact Kemppi service.
1016	Optical failure	Alarm	Restart laser. If the alarm persists, contact Kemppi service.
1017	Optical failure	Alarm	Restart laser. If the alarm persists, contact Kemppi service.
1018	Optical failure	Alarm	Restart laser. If the alarm persists, contact Kemppi service.
1019	Condensation alarm	Alarm	Restart laser. If the alarm persists, contact Kemppi service.
1020	Internal temperature out of limits	Alarm	Use the laser equipment only in the specified conditions. Restart laser. If the alarm persists, contact Kemppi service.
1023	Internal temperature fault	Alarm	Restart laser. If the alarm persists, contact Kemppi service.
1024	Internal temperature fault	Alarm	Restart laser. If the alarm persists, contact Kemppi service.
1025	Water inlet temperature exceeded	Alarm	Restart laser. If the alarm persists, contact Kemppi service.

5.5 DISPOSAL



Do not dispose of any electrical equipment with normal waste!

In observance of WEEE Directive 2012/19/EU on waste of electrical and electronic equipment and European Directive 2011/65/EU on the restriction of the use of certain hazardous substances in electrical and electronic equipment, and their implementation in accordance with national law, electrical equipment that has reached the end of its life must be collected separately and taken to an appropriate environmentally responsible recycling facility. The owner of the equipment is obliged to deliver a decommissioned unit to a regional collection center, as per the instructions of local authorities or a Kemppi representative. By applying these European Directives you improve the environment and human health.

For more information:

6. TECHNICAL DATA

Technical data:

- "Laser power source" on the next page
- "Wire feeder" on page 113

Additional information:

- "Ordering info" on page 120
- "Wire feeder consumables" on page 114
- "Welding head nozzles" on page 118

6.1 LASER POWER SOURCE

FastBeam 3		
Feature		Value
Mains connection voltage		380...415 V ±10 %
Mains connection phases		3~50/60 Hz
Mains connection cable type		5G, H07RN-F
Mains connection cable size		2.5 mm²
Laser type		Optical fiber laser
Laser class		4
Laser class (pilot laser)		2
Optical fiber diameter		50 µm
Optical fiber length		10 m
Maximum laser power		3000 W
Laser wavelength		1070 nm
Laser beam quality		BPP 0.7
Idle state power consumption [P_{1idle}]		85 W
Maximum supply current [I_{1max}]		14.5 A
Power factor at rated maximum current	λ	0.95
Efficiency at rated maximum current	η	33 %
Voltage supply for auxiliary devices		48 V
Type of cooling		Liquid
Control panel, model		ControlPad
Control panel, type of installation		Wired remote
Wired communication type		CAN bus, Ethernet, Modbus/RS485
Operating temperature range		5...40 °C
Storage temperature range		5...40 °C
EMC class		A
Degree of protection		IP33
External dimensions	*L* x *W* x *H*	1100 x 468 x 847 mm
Weight without accessories		110 kg
Standards		EN ISO 11553-2, EN 60204-1, EN ISO 12100, EN IEC 61000-6-2, EN IEC 61000-6-4

6.2 WIRE FEEDER

CoolFeed 300		
Feature		Value
Operating voltage [U_1]		48 V
Supply voltage		48 V
Supply current at maximum load		1 A
Wire feed mechanism		4-roll
Diameter of feed rolls		32 mm
Filler wire diameter		0.8...1.6 mm
Filler wire diameter, Fe		0.8...1.6 mm
Filler wire diameter, Ss		0.8...1.6 mm
Filler wire diameter, Al		1...1.6 mm
Wire feed speed		0.2...6 m/min
Maximum wire spool weight		20 kg
Maximum wire spool diameter		300 mm
Operating temperature range		-20...40 °C
Storage temperature range		-40...60 °C
EMC class		A
Degree of protection		IP33
External dimensions	*L* x *W* x *H*	611 x 230 x 441 mm
Weight without accessories		9.2 kg
Standards		IEC 60974-5, -10

6.3 WIRE FEEDER CONSUMABLES

CoolFeed 300 wire feed roll and guide tube kits

This section lists the feed rolls and wire guide tubes available both separately and in consumable kits. The consumable kits contain recommended feed roll and wire guide tube combinations for selected filler wire materials and diameters. The wire feeder consumables can be ordered in Configurator.kemppi.com.

(In the tables, the materials mentioned first refer to primary suitability and the materials mentioned inside brackets refer to secondary suitability. The measurements are in millimeters.)

FE (MC/FC), standard, V-groove, plain			Qty
F000610	**FE (MC/FC) V0.8-0.9 FEEDER KIT #32**		
Drive feed roll	W001047	V0.8-0.9 WH PLASTIC	2
Pressure feed roll	W001048	V0.8-0.9 WH PLASTIC	2
Wire guide	W030616	1.6 METAL	1
Inlet tube	W020372	0.8-0.9 / 6.8 WH METAL	1
Middle tube	W007274	0,8-0,9/33 WH PLASTIC	1
Outlet tube	W013751	0.8-0.9 ID4.8 M9x1 WH METAL	1
F000611	**FE (MC/FC) V1.0 FEEDER KIT #32**		
Drive feed roll	W000675	V1.0 RD PLASTIC	2
Pressure feed roll	W000676	V1.0 RD PLASTIC	2
Wire guide	W030616	1.6 METAL	1
Inlet tube	W020373	1.0 / 6.8 RD METAL	1
Middle tube	W007275	1.0/33 RD PLASTIC	1
Outlet tube	W013752	1.0 ID5.0 M9x1 RD METAL	1
F000612	**FE (MC/FC) V1.2 FEEDER KIT #32**		
Drive feed roll	W000960	V1.2 OG PLASTIC	2
Pressure feed roll	W000961	V1.2 OG PLASTIC	2
Wire guide	W030616	1.6 METAL	1
Inlet tube	W020374	1.2 / 6.8 OG METAL	1
Middle tube	W007276	1.2/33 OG PLASTIC	1
Outlet tube	W013753	1.2 ID5.0 M9x1 OG METAL	1
F000613	**FE (MC/FC) V1.6 FEEDER KIT #32**		
Drive feed roll	W001051	V1.6 YE PLASTIC	2
Pressure feed roll	W001052	V1.6 YE PLASTIC	2
Wire guide	W030616	1.6 METAL	1
Inlet tube	W020376	1.4-1.6 / 6.8 YE METAL	1
Middle tube	W007278	1.6/33 YE PLASTIC	1
Outlet tube	W013755	1.6 ID5.0 M9x1 YE METAL	1

SS,CU (FE), standard, V-groove, plain		Qty
F000614	**SS,CU (FE) V0.8-0.9 FEEDER KIT #32**	

Drive feed roll	W001047	V0.8-0.9 WH PLASTIC	2
Pressure feed roll	W001048	V0.8-0.9 WH PLASTIC	2
Wire guide	W030623	1.6 PLASTIC	1
Inlet tube	W020364	0.8-0.9 / 6.2 WH PLASTIC	1
Middle tube	W007274	0.8-0.9/33 WH PLASTIC	1
Outlet tube	W013596	0.8-0.9 ID4.9 M9x1 WH PLASTIC	1
F000615	**SS,CU (FE) V1.0 FEEDER KIT #32**		
Drive feed roll	W000675	V1.0 RD PLASTIC	2
Pressure feed roll	W000676	V1.0 RD PLASTIC	2
Wire guide	W030623	1.6 PLASTIC	1
Inlet tube	W020365	1.0 / 6.2 RD PLASTIC	1
Middle tube	W007275	1.0/33 RD PLASTIC	1
Outlet tube	W013597	1.0 ID4.9 M9x1 RD PLASTIC	1
F000616	**SS,CU (FE) V1.2 FEEDER KIT #32**		
Drive feed roll	W000960	V1.2 OG PLASTIC	2
Pressure feed roll	W000961	V1.2 OG PLASTIC	2
Wire guide	W030623	1.6 PLASTIC	1
Inlet tube	W020366	1.2 / 6.2 OG PLASTIC	1
Middle tube	W007276	1.2/33 OG PLASTIC	1
Outlet tube	W013598	1.2 ID4.9 M9x1 OG PLASTIC	1
F000617	**SS,CU (FE) V1.6 FEEDER KIT #32**		
Drive feed roll	W001051	V1.6 YE PLASTIC	2
Pressure feed roll	W001052	V1.6 YE PLASTIC	2
Wire guide	W030623	1.6 PLASTIC	1
Inlet tube	W020368	1.6 / 6.2 YE PLASTIC	1
Middle tube	W007278	1.6/33 YE PLASTIC	1
Outlet tube	W013600	1.6 ID4.9 M9x1 YE PLASTIC	1

AL, standard, U-groove			Qty
F000618	**AL U1.0 FEEDER KIT #32**		
Drive feed roll	W001067	U1.0 RD PLASTIC	2
Pressure feed roll	W001068	U1.0 RD PLASTIC	2
Wire guide	W030623	1.6 PLASTIC	1
Inlet tube	W020365	1.0 / 6.2 RD PLASTIC	1
Middle tube	W007275	1.0/33 RD PLASTIC	1
Outlet tube	W013597	1.0 ID4.9 M9x1 RD PLASTIC	1
F000619	**AL U1.2 FEEDER KIT #32**		
Drive feed roll	W001069	U1.2 OG PLASTIC	2

Pressure feed roll	W001070	U1.2 OG PLASTIC	2
Wire guide	W030623	1.6 PLASTIC	1
Inlet tube	W020366	1.2 / 6.2 OG PLASTIC	1
Middle tube	W007276	1.2 / 33 OG PLASTIC	1
Outlet tube	W013598	1.2 ID4.9 M9x1 OG PLASTIC	1
F000620	**AL U1.6 FEEDER KIT #32**		
Drive feed roll	W001071	U1.6 YE PLASTIC	2
Pressure feed roll	W001072	U1.6 YE PLASTIC	2
Wire guide	W030623	1.6 PLASTIC	1
Inlet tube	W020368	1.6 / 6.2 YE PLASTIC	1
Middle tube	W007278	1.6/33 YE PLASTIC	1
Outlet tube	W013600	1.6 ID4.9 M9x1 YE PLASTIC	1

Color coding:

WH = White, RD = Red, OG = Orange, BN = Brown, YE = Yellow, BK = Black, GY = Gray, LTGY = Light gray.

Feed roll profile symbols:

V	V-groove, plain
V≡	V-groove, knurled
U	U-groove

CoolFeed 300 wire liners

This section lists the available wire liner options. Note that the wire liners may be delivered longer (e.g. 10 m), but they are to be shortened to the maximum of 5 meters in length before use. Refer to "Installing and replacing wire guides and wire liner" on page 42 for instructions.

Wire diameter	Wire material	Recommended Kemppi wire liner	Wire liner code	Recommended wire liner length
0.8 mm	Fe	Steel spiral 1.4 mm	W030624	≤ 5 m
1.0 mm	Fe	Steel spiral 1.4 or 1.8 mm*	W030624 or W030625*	≤ 5 m
1.2 mm	Fe	Steel spiral 1.8 mm	W030625	≤ 5 m
1.6 mm	Fe	Steel spiral 2.4 mm	W030627	≤ 5 m
0.8 mm	SS	DL Chili 1.5 mm	W030620	≤ 5 m
1.0 mm	SS	DL Chili 1.5 mm	W030620	≤ 5 m
1.2 mm	SS	DL Chili 1.5 or 2.0 mm*	W030620 or W030621*	≤ 5 m

1.6 mm	SS	DL Chili 2.0 or 2.5 mm*	W030621 or W030622*	≤ 5 m
1.0 mm	Al	DL Chili 1.5 mm	W030620	≤ 5 m
1.2 mm	Al	DL Chili 1.5 or 2.0 mm*	W030620 or W030621*	≤ 5 m
1.6 mm	Al	DL Chili 2.0 or 2.5 mm*	W030621 or W030622*	≤ 5 m

** Where there are two wire liner options available, the primary recommendation is the smaller option.*

6.4 WELDING HEAD NOZZLES

This chapter describes the welding head nozzle components available for the FastBeam 3 laser welding equipment.

Welding nozzles:

Welding nozzle		Application	Filler wire type/size
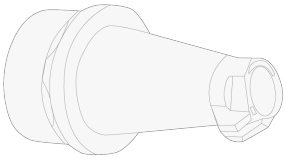	AS-12*	Welding with single filler wire	1.2 mm
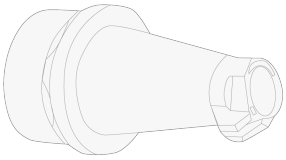	AS-08 / AS-10	Welding with single filler wire	0.8 / 1.0 mm
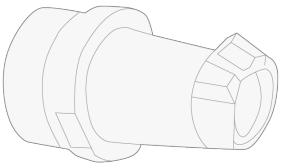	AS-12D*	Welding with double filler wire (and for cleaning)	1.2 mm
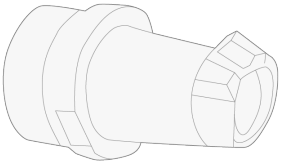	AS-10D / AS-16D	Welding with double filler wire	1.0 / 1.6 mm
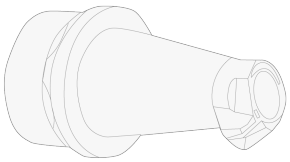	BS-16	Welding with single filler wire	1.6 mm
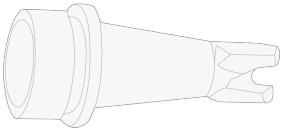	FS-16	Outer angle welding with single filler wire	1.6 mm
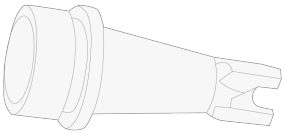	ES-12	Outer angle welding with single filler wire (90° outer angle)	0.8 / 1.0 / 1.2 mm

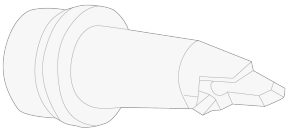	CS-12	Outer angle welding with single filler wire (not 90° outer angle)	0.8 / 1.0 / 1.2 mm
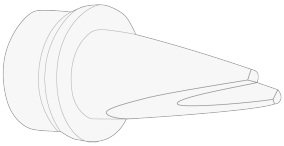	C	Welding without filler wire, outer angle welding	-

(Outer angle welding refers to an outside corner weld.)

** Included with standard delivery (starter kit).*

Wire guide nozzles:

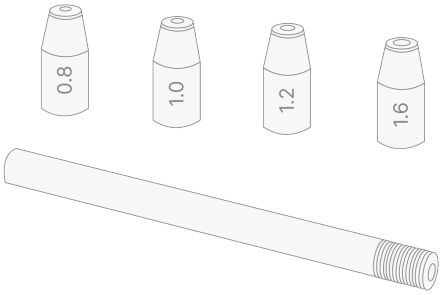

** 1.2 mm wire guide nozzle and double-wire guide nozzle are included with standard delivery (starter kit). The starter kit also includes two wire guide nozzle tubes, 60 mm and 100 mm. The shorter wire guide nozzle tube suits most applications.*

Graded welding torch nozzle neck tube:

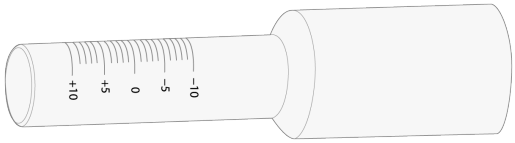

6.5 ORDERING INFO

For FastBeam ordering information and optional accessories, refer to Kemppi.com.

7. APPENDICES

7.1 APPENDIX: DOOR INTERLOCK EXAMPLE

