MASTER T 505 ACDC
MASTERTIG COOLER MXL

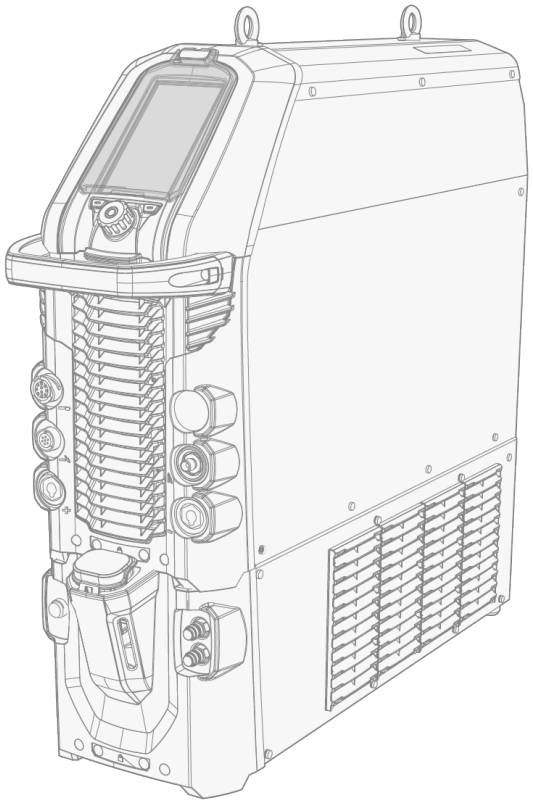

CONTENTS

1. General **4**
1.1 Welding safety 6
1.2 Equipment description 7
2. Installation **9**
2.1 Installing mains plug 10
2.2 Installing cooling unit (optional) 11
2.3 Installing equipment on cart (optional) 14
2.4 Connecting TIG torch 17
2.5 Connecting earth return cable and clamp 18
2.6 Connecting MMA electrode holder 19
2.7 Installing remote control (optional) 20
2.8 Installing gas bottle 23
2.9 Installing gas bottle on cart 24
2.10 Replacing control panel 25
2.11 Lifting equipment 29
3. Operation **31**
3.1 Preparing welding system for use 32
3.2 Operating control panel MTP35X 33
3.2.1 Home view 34
3.2.2 Weld Assist view 35
3.2.3 Memory channels view 39
3.2.4 Start & stop sequence view 40
3.2.5 Pulse view 45
3.2.6 Current mode view 47
3.2.7 Settings view 49
3.2.8 Info view 54
3.2.9 Screen saver 55
3.3 Operating cooling unit 56
3.4 Using remote control HR43/HR45/FR43/FR45 57
3.5 Using remote control HR55 59
3.6 Cleaning and polishing weld 61
3.7 Demagnetizing workpiece 62
3.8 Troubleshooting 63
3.8.1 Error codes 64
4. Maintenance **66**
4.1 Daily, periodic and annual maintenance 67
4.2 Disposal 69

5. Technical data **70**
5.1 Power source Master T 505 ACDC 71
5.2 Cooling unit MasterTig Cooler MXL 75
5.3 TIG guide tables 76
5.4 Welding processes and features 77
5.5 Ordering info 83

1. GENERAL

These instructions describe the use of Kemppi's Master T 505 ACDC welding power source. The system consists of a power source with MTP35X control panel (factory installed), optional MasterTig Cooler MXL water cooler, optional transport unit and Flexlite TX TIG welding torch.

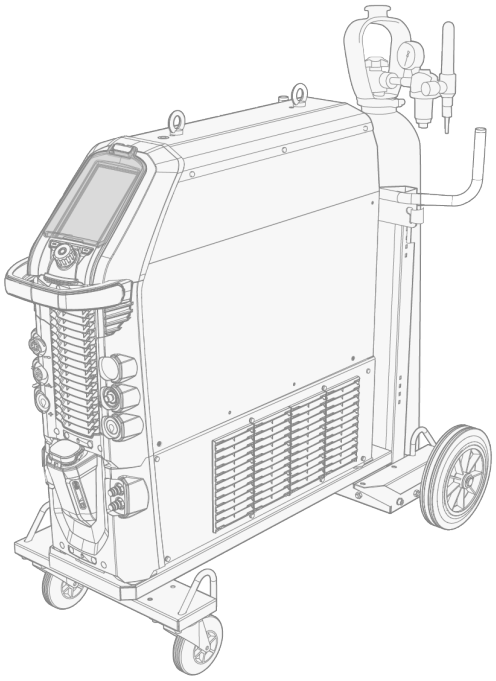

Important notes

Read the instructions through carefully.

Items in the manual that require particular attention in order to minimize damage and harm are indicated with the below symbols. Read these sections carefully and follow their instructions.

Note: Gives the user a useful piece of information.

Caution: Describes a situation that may result in damage to the equipment or system.

Warning: Describes a potentially dangerous situation. If not avoided, it will result in personal damage or fatal injury.

General notices

https://kemp.cc/ud/notices

EULA (End User License Agreement)

https://kemp.cc/ud/eula

Warranty

https://kemp.cc/ud/warranty

DISCLAIMER

While every effort has been made to ensure that the information contained in this guide is accurate and complete, no liability can be accepted for any errors or omissions. Kemppi reserves the right to change the specification of the product described at any time without prior notice. Do not copy, record, reproduce or transmit the contents of this guide without prior permission from Kemppi.

The source language for this document is English. All other language versions available are either professional human translations or advanced machine translations. Any feedback regarding translation terminology can be sent to userdoc@kemppi.com.

1.1 WELDING SAFETY

Welding is always classified as hot work, and welding equipment typically contains high-voltage circuits. If you are not familiar with welding and welding principles, it is recommended that you acquire welding training or professional guidance before commencing welding. The welding equipment mentioned in this manual is intended for professional use in an industrial environment.

For your own safety, and that of your working environment, pay particular attention to the safety instructions delivered with the equipment.

You can also access and download the safety instructions by using these links:

- Safety
  (https://kemp.cc/safety/general)
- Personal protection
  (https://kemp.cc/safety/ppe)
- Welding guns and torches
  (https://kemp.cc/safety/torches)

1.2 EQUIPMENT DESCRIPTION

Kemppi Master T 505 ACDC welding equipment is designed for professional industrial use, with characteristics especially suitable for welding materials like aluminum and stainless steel. The multipurpose Master T 505 power source is suitable for MMA welding, TIG welding and pulsed TIG welding with both direct current (DC) and alternating current (AC). The Master T 505 power source can also be used for demagnetizing the work piece and for cleaning and polishing the weld.

Power source model:

- Master T 505 ACDC GM, multi-voltage and generator compatible (500 A AC/DC) *

  ** A dedicated VRD (Voltage Reduction Device) model version, where the VRD function is locked on, is also available.*

Control panel:

- MTP35X control panel (AC/DC, 7" TFT LCD display panel).

Equipment:

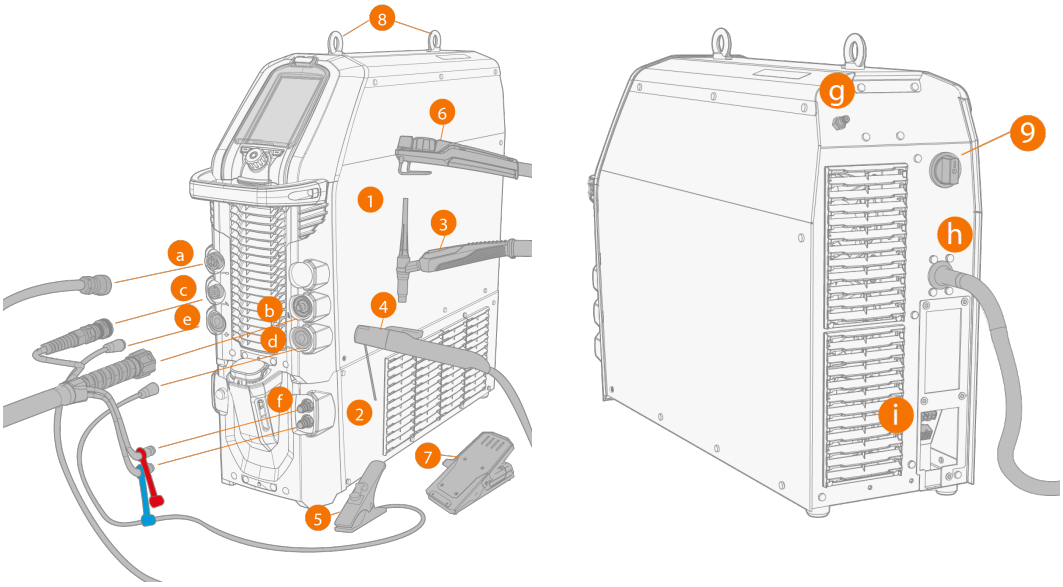

1. Master T 505 power source
2. MasterTig Cooler MXL (optional)
3. TIG torch
4. Electrode holder
5. Earth return cable and clamp
6. Remote control (wired or wireless)
7. Foot pedal remote control (wired or wireless)
8. Lifting eyes
9. Power ON/OFF switch.

Connections:

a. External remote control connector
b. TIG welding cable connector (connection type R1/4)
c. Control cable connector
d. DIX connector (-)

e. DIX connector (+)
f. Coolant liquid inlet and outlet (color-coded)
g. Gas hose connection
h. Mains cable
i. Cooling unit connection.

EQUIPMENT IDENTIFICATION

Serial number

Serial number of the device is marked on the rating plate or in another distinctive location on the device. It is important to make correct reference to the serial number of the product when ordering spare parts or making repairs for example.

Quick Response (QR) code

Device-related information or a web link to such information may be found in the form of a QR code on the device. The code can be read, for example, with a mobile device camera and a QR code application.

2. INSTALLATION

Do not connect the equipment to the mains before the installation is complete.

Do not attempt to move or hang the equipment mechanically (e.g. with a hoist) from the handle on the power source unit. The handle is meant only for manual moving when the equipment is installed on a cart.

Place the machine on a horizontal, stable and clean ground. Protect the machine from rain and direct sunshine. Check that there is enough space for cooling air circulation in the machine vicinity.

Before installation

- Make sure to acknowledge and follow the local and national requirements regarding installation and use of high voltage units.
- Check the contents of the packages and make sure the parts are not damaged.
- Before you install the power source on site, see the requirements for the mains cable type and fuse rating given in "Technical data" on page 70.

Distribution network

This Class A equipment is not intended for use in residential locations where the electrical power is provided by the public low-voltage supply system. Provided that the public low voltage short circuit power at the point of common coupling is higher than or equal to the value stated on the list below, this equipment is compliant with IEC 61000-3-11 and IEC 61000-3-12 and can be connected to public low voltage systems. It is the responsibility of the installer or user of the equipment to ensure, by consultation with the distribution network operator if necessary, that the system impedance complies with the impedance restrictions.

- *Master T 505 ACDC: 3.4 MVA*

2.1 INSTALLING MAINS PLUG

Only an authorized electrician is allowed to install the mains cable and plug.

Do not connect the machine to the mains before the installation is complete.

Install the 3-phase plug according to the power source and site requirements. Refer also to "Technical data" on page 70 for power source specific technical information.

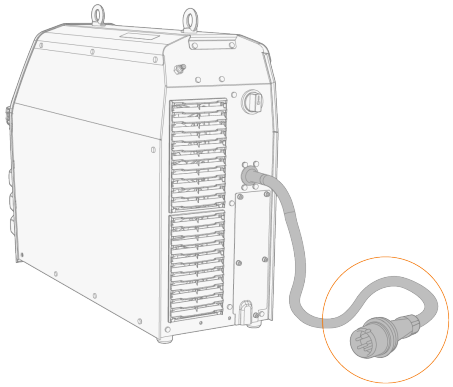

2.2 INSTALLING COOLING UNIT (OPTIONAL)

For instructions on installing the equipment on cart, refer to "Installing equipment on cart (optional)" on page 14.

⚠ *The cooling unit must be installed by authorized service personnel.*

⚠ *Do not attempt to move the power source with a hoist from its handle. The handle is meant for moving the equipment when installed on cart.*

Tools needed:

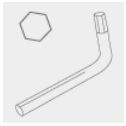

1. Remove the power source's rear cover.

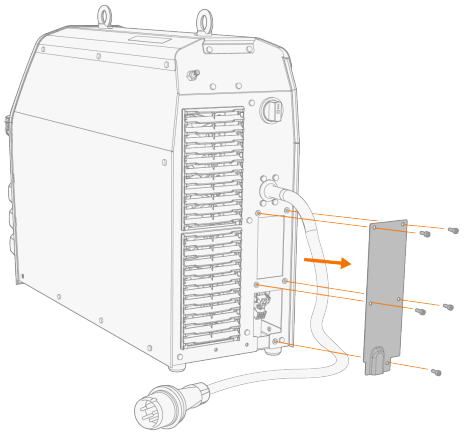

2. Route the cooling unit's connection cables so that they remain accessible through the next steps.

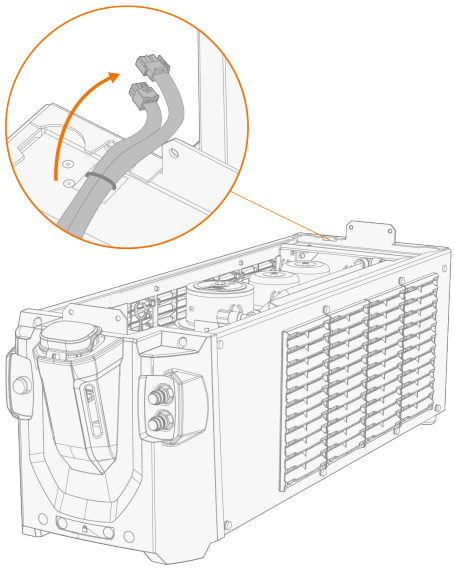

3. Lift the power source with a hoist from the lifting eyes and place it on top of the cooling unit so that the fixing plates align and go into their slots. Fix the units together with two screws in the front and two screws in the rear.

⚠ *Ensure that the cooling unit's connection cables are not caught and/or damaged between the edges.*

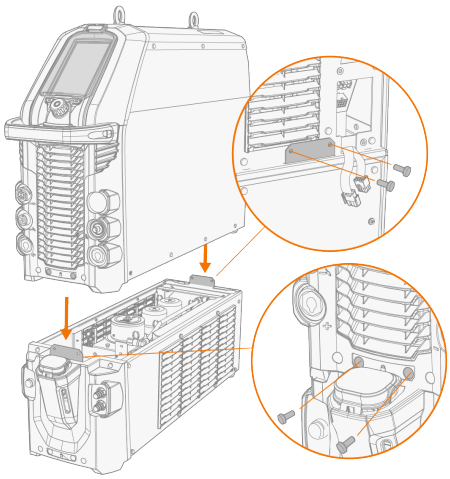

4. Connect the cooling unit cables and put the rear cover back.

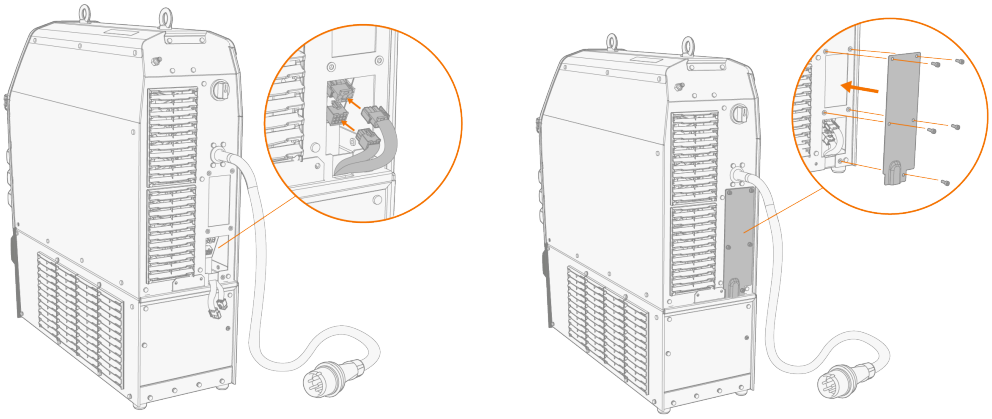

5. Fill the cooling unit with cooling liquid.

>> MasterTig Cooler MXL tank volume is 3 litres and the recommended coolant is MPG 4456 (Kemppi mixture).

Avoid cooling liquid contact with skin or eyes. In case of an injury, seek for medical advice.

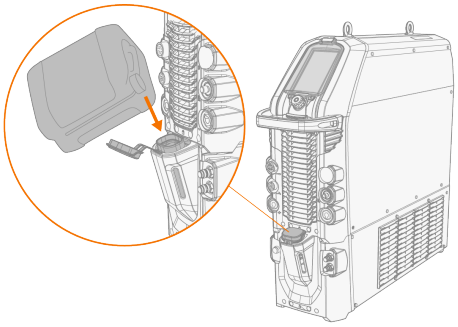

2.3 INSTALLING EQUIPMENT ON CART (OPTIONAL)

There is a 4-wheel transport unit available for use with the Master T welding equipment.

Tools needed:

1. Install the cooling unit on the cart.

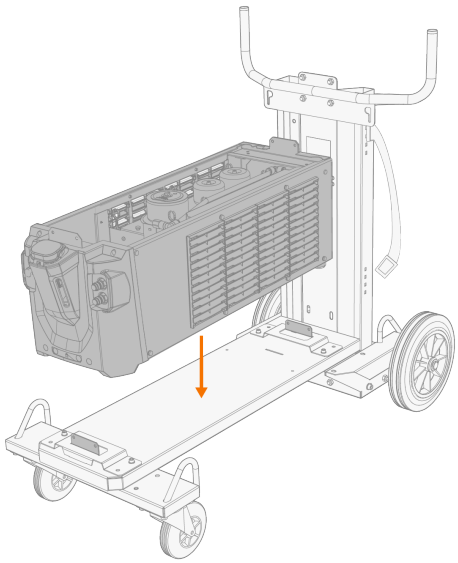

2. Fix the cooling unit to the cart with two screws (M5x12) in the front and two screws (M5x12) in the rear.

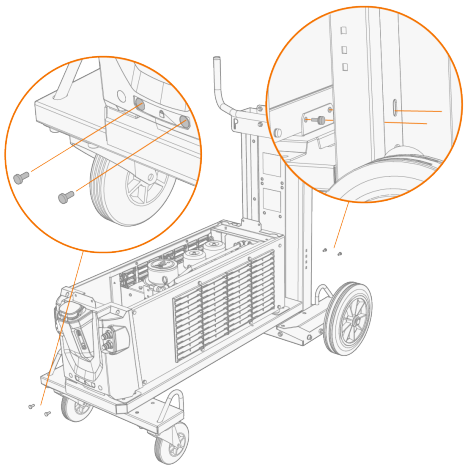

3. Route the cooling unit's connection cables so that they remain accessible through the next steps.

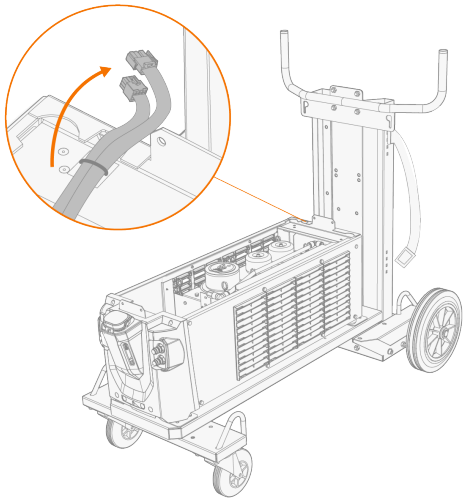

4. Install the power source on top of the cooling unit. Refer to "Installing cooling unit (optional)" on page 11 for installation details.
5. Secure the power source with two screws (M5x12) in the front and two screws (M5x12) in the rear.

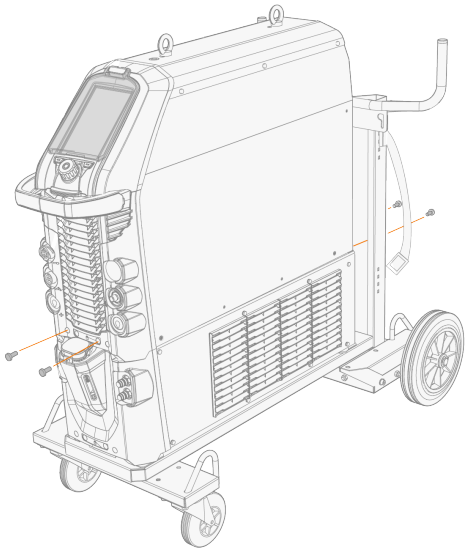

6. Secure the equipment to the cart with the rear connection bracket. Rear screws: M8x16, top screws: M5x12.

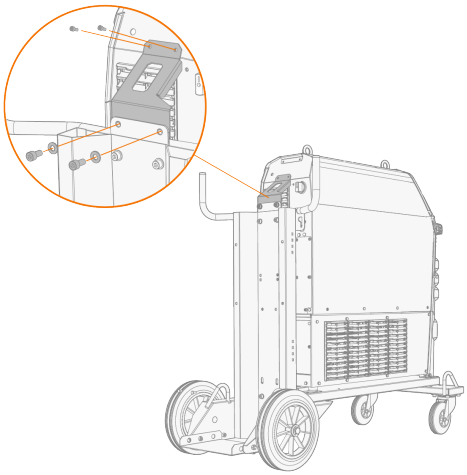

For lifting the equipment, refer to "Lifting equipment" on page 29.

2.4 CONNECTING TIG TORCH

Gas-cooled TIG torch:

1. Assemble the TIG torch according to the instructions delivered with the torch.
2. Connect the TIG torch cables to the power source. Secure by turning the connectors clockwise.

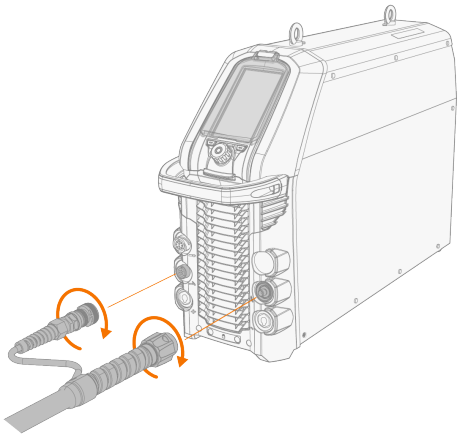

Water-cooled TIG torch:

The cooling unit must already be installed and in place at this stage. Refer to "Installing cooling unit (optional)" on page 11.

1. Assemble the TIG torch according to the instructions delivered with the torch.
2. Connect TIG torch cables and the water cooling inlet and outlet hoses to the units. Secure by turning the connectors clockwise.

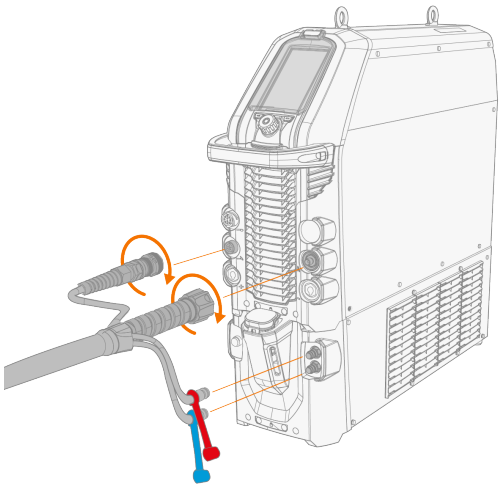

The water cooling connectors are color-coded.

Tip: For Kemppi welding torches, refer also to userdoc.kemppi.com.

2.5 CONNECTING EARTH RETURN CABLE AND CLAMP

Keep the work piece connected to earth to reduce the risk of injury to users or damage to electrical equipment.

1. Connect the earth return cable to the negative (-) connector on the power source.
2. Ensure the earth return clamp is secured tightly to the work piece or work surface.
3. Ensure that the clamp's contact surface is as large as possible.

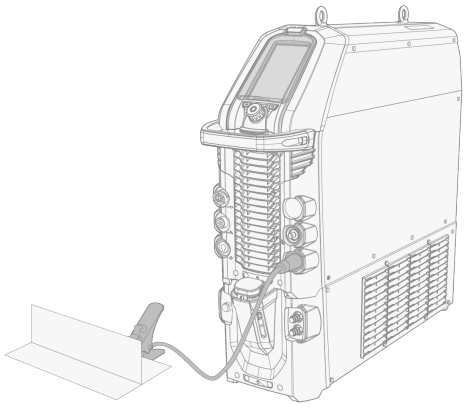

2.6 CONNECTING MMA ELECTRODE HOLDER

1. Connect the MMA electrode holder to the positive (+) connector on the power source.
2. Connect the earth return cable to the negative (-) connector on the power source.
3. Ensure the earth return clamp is secured tightly to the work piece or work surface.
4. Ensure that the clamp's contact surface is as large as possible.

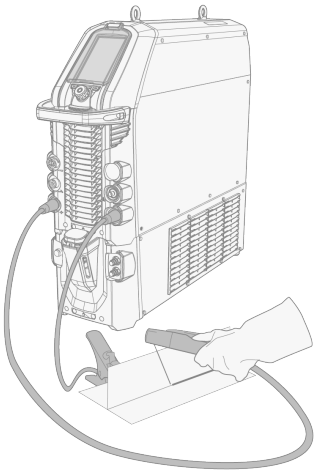

2.7 INSTALLING REMOTE CONTROL (OPTIONAL)

To enable remote operation, set the **Remote control mode** in the control panel settings. For MTP35X control panel, refer to "Settings view" on page 49.

When the Remote mode is selected on the control panel, and both wireless and wired remotes are connected, the wired remote will be used.

Refer to the (+) and (-) signs on the battery holder and in the remote for the correct positioning of batteries.

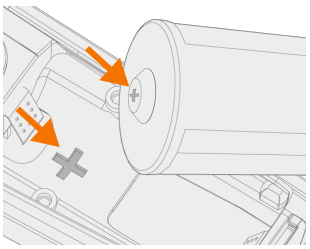

Tools needed:

T15

Wireless hand remote control (HR45)

1. Take the remote control battery holder out. Install the batteries (3 x AAA) and put the holder back into the remote.

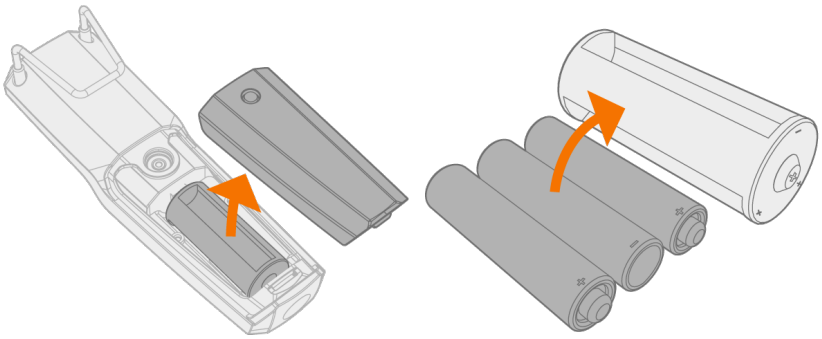

2. Turn on the **Wireless remote** in the control panel settings.
3. Keeping the wireless remote close to the power source, long press (3 sec.) the wireless remote pairing button on the remote.

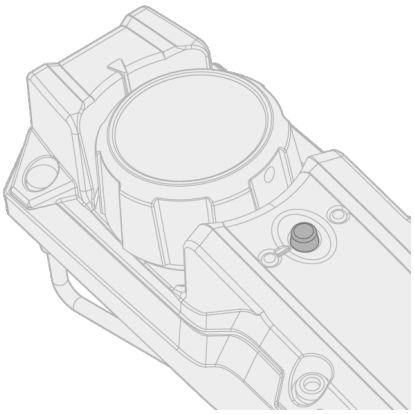

4. Once connected, the blue LED on the left of the connection button is lit. The green LED blinks when the battery is low.

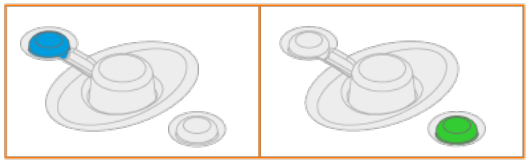

5. To enable remote operation, select Remote mode in the control panel settings.

Remote control with cable (HR43, FR43)

1. Connect the remote control cable to the power source.

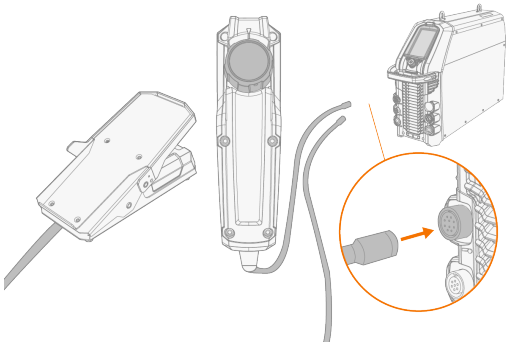

Wireless foot pedal (FR45)

Refer to the (+) and (-) signs on the battery holder and in the remote for the correct positioning of batteries.

1. Take the foot pedal battery holder out. Install the batteries (3 x AAA) and put the holder back into the foot pedal.

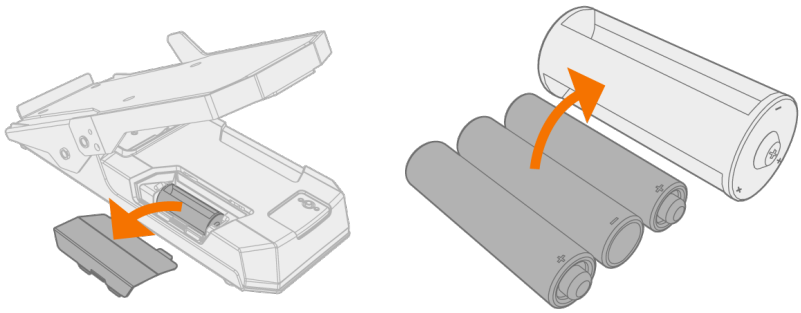

2. Turn on the **Wireless remote** in the control panel settings.
3. Keeping the wireless remote close to the power source, long press (3 sec.) the wireless remote pairing button on the foot pedal.

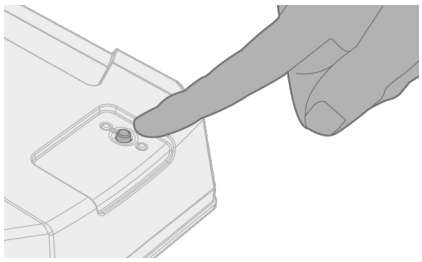

4. Once connected, the blue LED next to the button is lit. The green LED blinks when the battery is low.

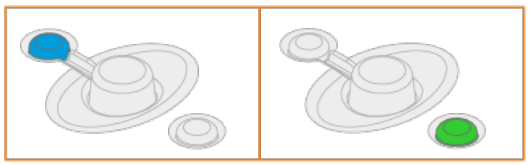

Tip: You can set minimum and maximum values for the remote current adjustment in the control panel settings.

Remote control HR55

1. Connect the remote control cable to the power source.

The remote control selections in the control panel settings are not required with HR55 remote control. When connected, the HR55 remote control is automatically in use.

2.8 INSTALLING GAS BOTTLE

Handle gas bottles with care. There is a risk of injury if the gas bottle or the bottle valve is damaged!

Install the gas bottle on the transport unit first, then make the connections.

Use inert gas, such as argon, helium or argon-helium mixture, as a shielding gas in TIG welding. Make sure that the gas flow regulator is suitable for the gas type used. The flow rate is set according to the welding current, joint form and the size of the electrode.

A suitable flow rate for argon is normally 5 – 15 l/min. If the gas flow is not correctly set, this will increase the risk of defects in the weld (weld porosity). Spark ignition becomes more difficult if the gas flow is too high.

Contact your local Kemppi dealer for choosing the gas and the equipment.

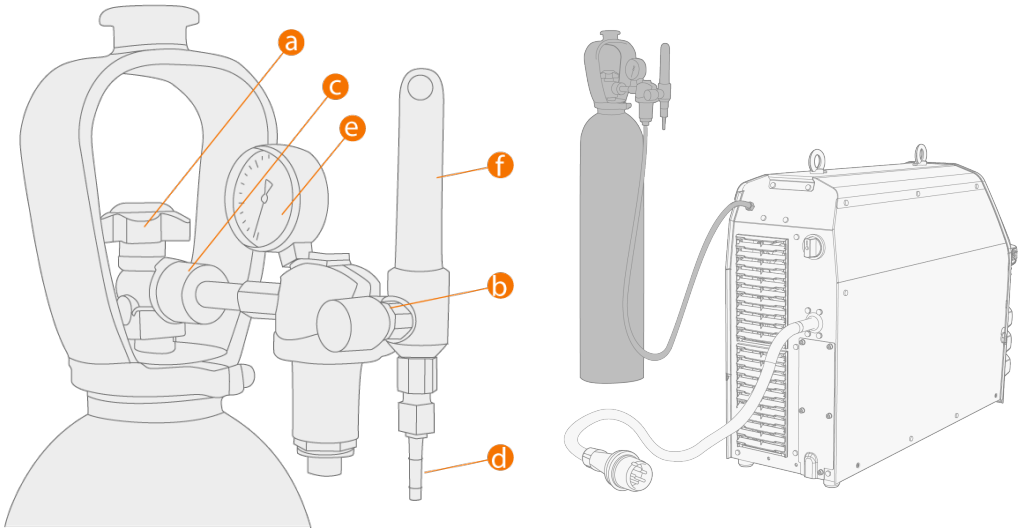

a. Gas bottle valve
b. Flow regulation screw
c. Connecting nut
d. Hose connector
e. Gas bottle contents indicator
f. Gas flow meter

Always secure the gas bottle properly in an upright position to a special holder on the wall or on the welding equipment cart. Always keep the gas bottle valve closed when not welding. If the machine will be out of use for a long time, unscrew the pressure regulation screw.

Do not use the whole contents of the bottle.

Use a suitable shielding gas for the welding application.

Always use an approved and tested regulator and flow meter.

2.9 INSTALLING GAS BOTTLE ON CART

1. Tilt the pivoting gas bottle rack down against the floor for easier gas bottle mounting.

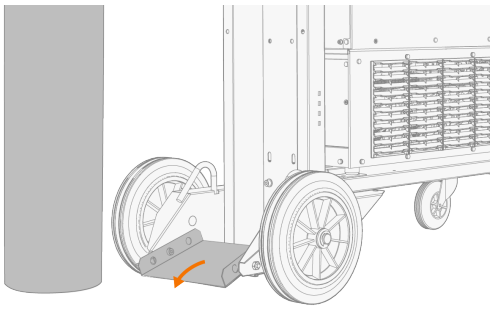

2. Move the gas bottle onto the rack.

   >> Tilt the gas bottle back and pull the cart towards the gas bottle and push the top of the gas bottle forwards. The pivot plate assists to lift the bottle into upright position.

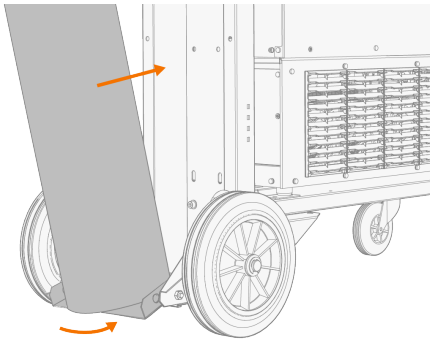

3. Secure the gas bottle in place with a strap or a chain. Use the dedicated fixing points in the cart.

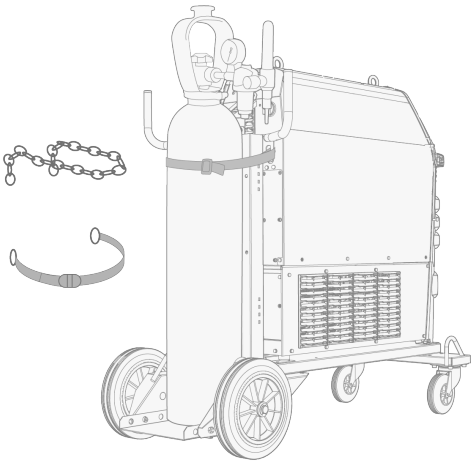

2.10 REPLACING CONTROL PANEL

Tools needed:

T20

Detaching control panel

1. Detach the control panel and frame from the power source:
   >> Remove the fixing screws at the top and bottom of the panel.
   >> First pull the top of the control panel slightly and then the rest of the panel.

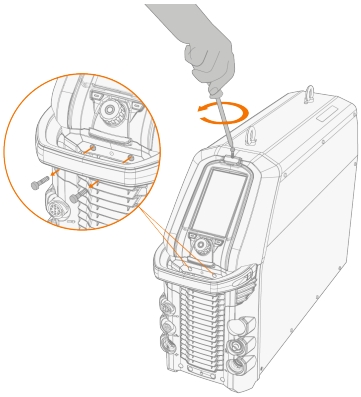

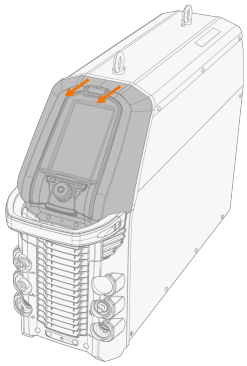

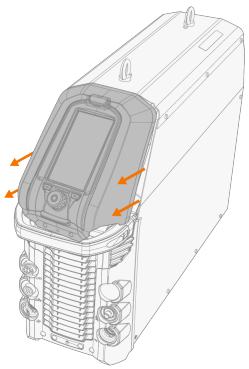

2. Disconnect the control panel's cable.

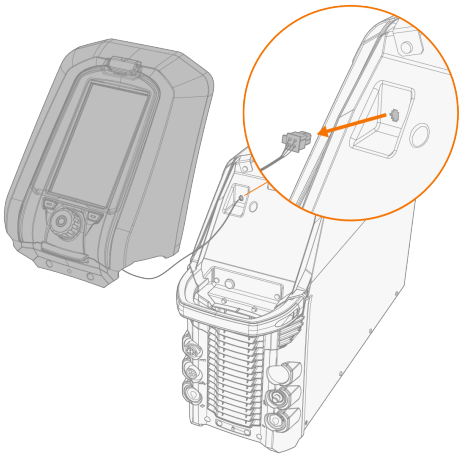

3. Remove the control panel from the frame:
   >> Release the clips at the top by pressing the panel from the outside.
   >> Release one clip at the bottom, rotate the panel slightly and release the second clip.

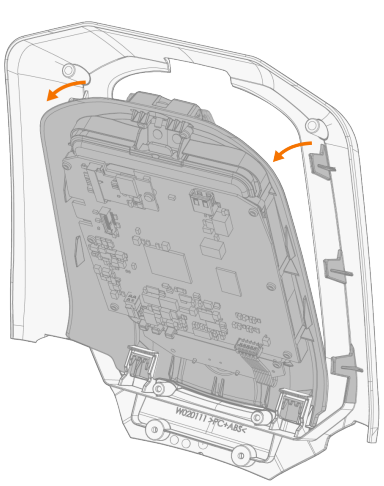

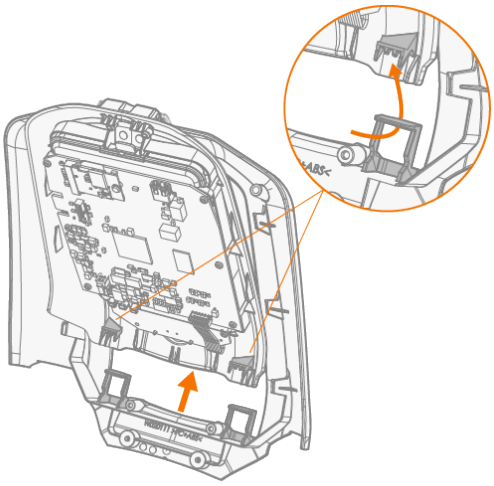

Installing control panel

1. Install the control panel to the frame. Ensure that the panel is firmly attached to the frame.

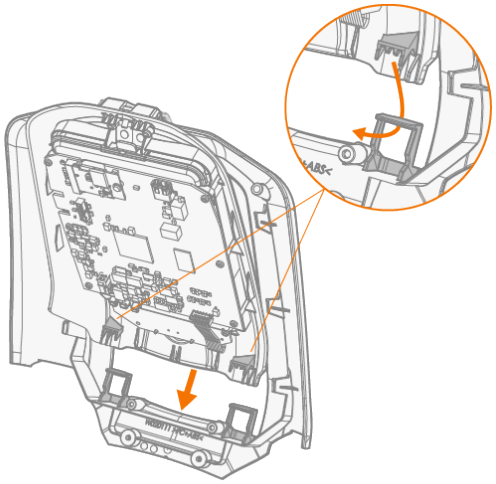

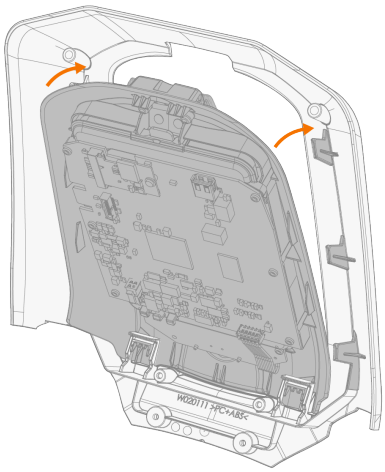

2. Connect the new control panel's cable.

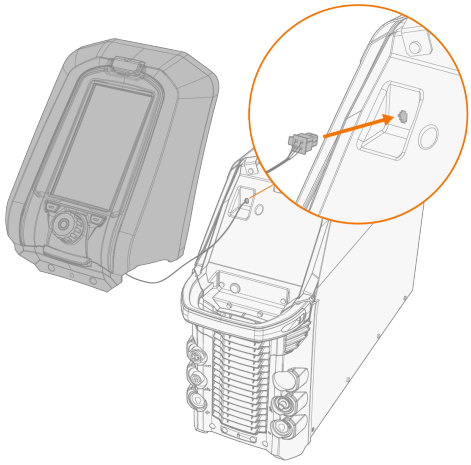

3. Mount the control panel in place:
   >> Insert the bottom of the panel in the slot first.
   >> Push the top of the panel firmly so that it locks in place.
   >> Secure the control panel in place with the fixing screws.

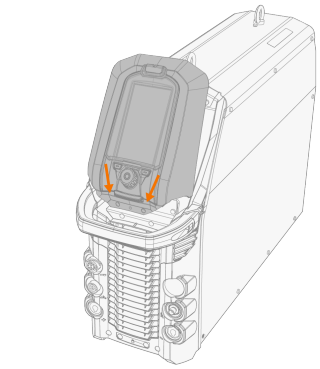

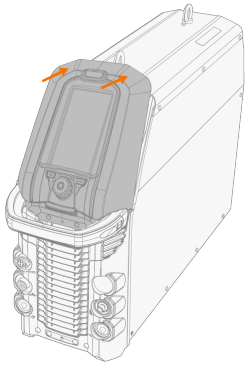

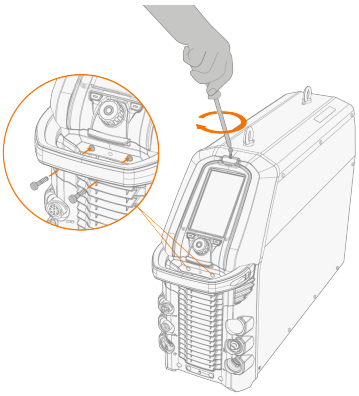

2.11 LIFTING EQUIPMENT

If you need to lift the Master T 505 welding equipment, pay special attention to the safety measures. Also follow the local regulations.

Connect the 2-legged chain or strap from the hoist hook to the two lifting eyes on the power source.

⚠ *Ensure the chain or strap is long enough to avoid excessive lateral load on the lifting eyes.*

⚠ *Do not attempt to lift the equipment with a hoist from the handle on the power source. The handle is for moving the equipment when installed on cart.*

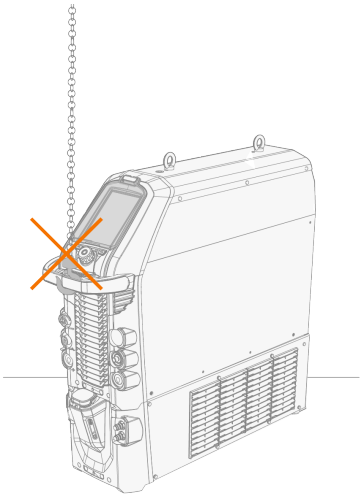

Lifting equipment on cart

1. Ensure that the welding equipment is properly secured to the cart.
2. Connect the 4-legged chain or straps from the hoist hook to the four lifting points on the cart on both sides of the welding equipment.

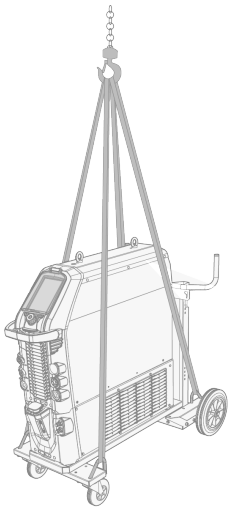

If a gas bottle is installed on cart, DO NOT attempt to lift the cart with the gas bottle in place.

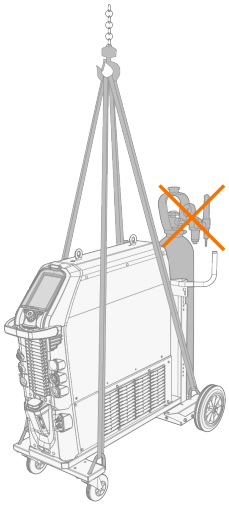

3. OPERATION

Before using the equipment, ensure that all the necessary installation actions have been completed according to your equipment setup.

Welding is forbidden in places where there is an immediate fire or explosion hazard!

Welding fumes may cause injury, take care of sufficient ventilation during welding!

Check that there is enough space for cooling air circulation in the machine vicinity.

If the welding equipment is left unused for a longer period, disconnect the mains plug from the mains.

Do not use the mains plug as a power ON/OFF switch.

Always check before use that interconnecting cable, shielding gas hose, earth return cable/clamp and mains cable are in serviceable condition. Ensure that the connectors are correctly fastened. Loose connectors can impair welding performance and damage connectors.

For technical data and general guidance for selecting initial TIG welding parameters, refer to "TIG guide tables" on page 76.

For troubleshooting, refer to "Troubleshooting" on page 63.

3.1 PREPARING WELDING SYSTEM FOR USE

Before starting the use of the welding equipment:

- Ensure the installation has been completed
- Switch the welding equipment on
- Prepare the cooler
- Connect the earth return cable.

Turning on welding system

Turn the power source ON. The power switch is located in the rear.

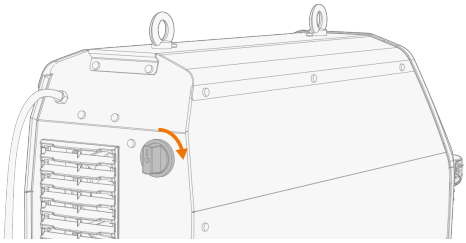

Depending on your control panel type, wait approximately 15 seconds for the system to start up.

Use the main switch to start and shut down the welding equipment. Do not use the mains plug as a switch.

If the machine is left unused for a longer period, detach the mains plug to disconnect it from the mains.

Preparing cooler

Fill the coolant container inside the cooler with Kemppi cooling liquid. For instructions on filling the cooler, refer to "Installing cooling unit (optional)" on page 11.

To weld, you must pump the coolant through the system by pressing the coolant circulation button in the front panel of the cooling unit.

Connecting earth return cable

Keep the work piece connected to earth to reduce the risk of injury to users or damage to electrical equipment.

Attach the earth return cable clamp on the work piece.

Ensure that the contact surface is clean of metal oxide and paint and that the clamp is firmly secured.

Selecting process

To select the process (TIG/MMA/Cleaning/Polishing), refer to "Settings view" on page 49.

3.2 OPERATING CONTROL PANEL MTP35X

Control panel MTP35X has a 7” TFT LCD display. In addition to setup and adjustment features, the MTP35X control panel includes memory channels, Weld Assist, option for more customized welding processes, assisting graphics and functions such as double pulse TIG, search arc and tail arc.

Controls:

The control knob can be turned and used as a push button to select functions and items on the screen. In addition to the control knob, there are two function buttons just below the panel display on both sides of the control knob.

1. Control knob and control knob button

- In home view, turning this knob adjusts the welding current (A)
- In other views, turning this knob switches between adjustable parameters and adjusts the selected parameter's value
- The control knob functions also as a push button, when the green light is lit in the knob center
- Used to navigate through the control panel views and selections.

2. Menu button (left function button)

- This is used to access the view menu
- With certain control panel settings and features this also acts as a ‘back’ or ‘cancel’ button.

3. Custom function button (right function button)

- This button can be used as a user-programmable shortcut
- With certain control panel settings and features this also acts as a ‘back’ or ‘cancel’ button.

The MTP35X control panel displays notifications, warnings and error messages with additional information directly on the screen. Refer also to "Troubleshooting" on page 63 in this manual for more information on solving error situations.

For welding process and control panel feature descriptions, refer to "Welding processes and features" on page 77.

Control panel views:

- "Home view" on the next page

- "Weld Assist view" on the next page
- "Memory channels view" on page 39
- "Start & stop sequence view" on page 40
- "Pulse view" on page 45
- "Current mode view" on page 47
- "Settings view" on page 49
- "Info view" on page 54

To navigate between different control panel views:

1. Press the menu button (2).
2. Browse to the target view by turning the control knob (1).
3. Select the view by pressing the knob (1).

Tip: You can switch between the home view and the previously used view by long pressing the menu button (2).

3.2.1 HOME VIEW

Home view is the control panel work mode after the initial machine and control panel start-up. When in Home view, the welding current can be adjusted directly by turning the control knob.

Depending on your welding settings, the following are shown:

- Welding current (A)
- Current mode (AC, DC-, DC+, MIX)
- Pulse mode: Auto / Selected value Hz (manual)
- Start & stop diagram
- Welding mode indicated by the diagram shape: Continuous, Spot or MicroTack
- Memory channel used
- Selected trigger logic, ignition mode, remote mode and welding process
- Warning and notification symbols.

1. Welding process (TIG / MMA / Cleaning / Polishing)
2. Trigger logic (2T/4T)
3. Ignition mode (Lift TIG ignition)

4. Wireless remote and its battery status
5. Remote mode (ON/OFF).

Warning and notification symbols:

a. Cooling unit

- Green: Cooling unit is connected and running
- Red: Cooling unit is connected, but there is a problem (e.g. coolant circulation is restricted)

b. General notification

- Yellow: This is a warning that requires attention
- Red: There is an error that prevents welding
- Error code is shown below the symbol

c. Operating temperature

- Red: Welding equipment has overheated

d. VRD (voltage reduction device)

- VRD symbol on: VRD is on
  >> This is always on in power source models where the VRD function is locked on.
- VRD symbol red (blinking): There is a fault with VRD that prevents welding
- VRD symbol off: VRD is off.

Tip: You can switch between the home view and the previously used view by long pressing the menu button.

3.2.2 WELD ASSIST VIEW

Weld Assist is a wizard-like utility for easy selection of welding parameters. The utility walks the user step-by-step through the selection of required parameters, presenting the selections in an easily understandable way for a non-technical user.

The Weld Assist feature is available for both TIG and MMA welding. In Weld Assist, the selections are made with the control knob (1) and with the two function buttons (2, 3):

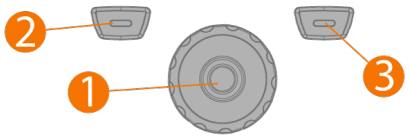

Using Weld Assist with TIG welding

1. Go to the **Weld Assist** view and select 'Start' with the control knob button (1).

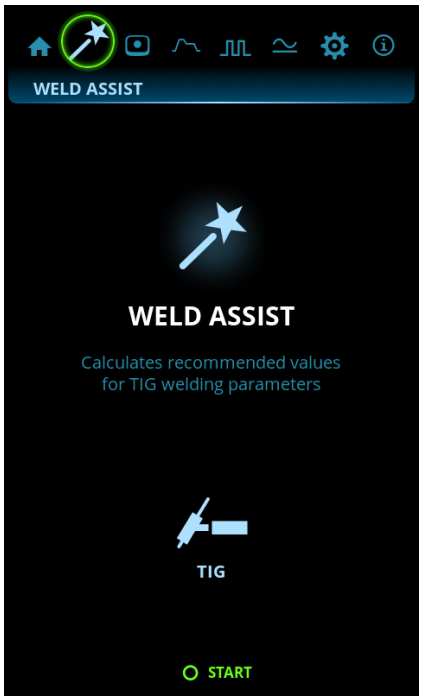

2. Select:
   >> The material you are about to weld: Fe (mild steel) / Ss (stainless steel) / Al (aluminum).
   >> The welded material's thickness (0.5 ... 10 mm).
   >> The welding joint type: butt joint / corner joint / edge joint / lap joint / fillet joint / tube joint / tube+-plate joint.
   >> The welding position: PA / PB / PC / PD / PE / PF / PG.

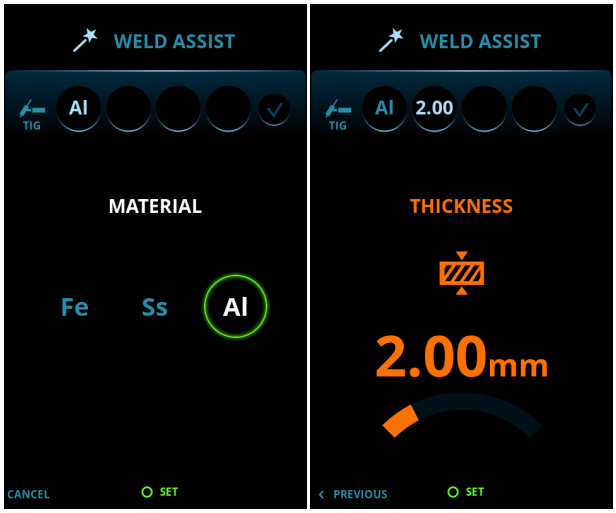

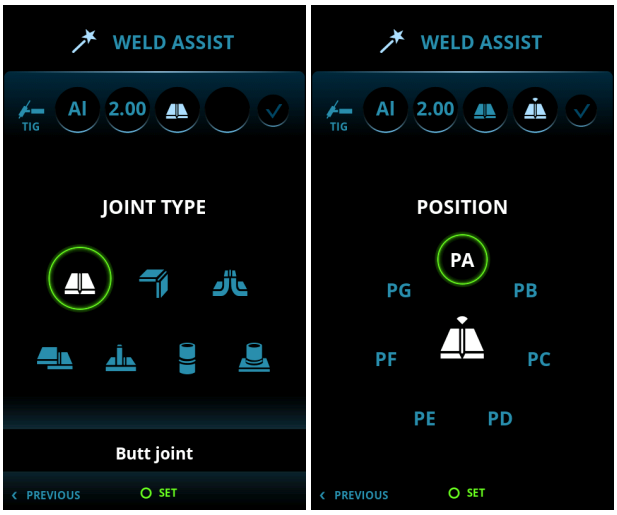

With MasterTig DC power sources, the aluminum (Al) selection is not available as a welded material.

3. Confirm the Weld Assist's recommendation for welding settings by selecting 'Apply'.

Tip: You can go back step by step in Weld Assist by pressing the left function button (2). Selecting Cancel with the right function button (3), you can cancel Weld Assist recommendations and return to the beginning.

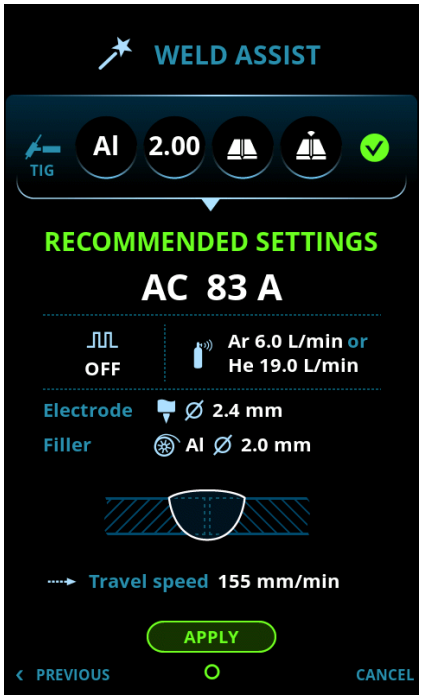

Weld Assist automatically sets the following parameters for you:

- Current mode: AC / DC-
- Current: Depends on the machine used
- Pulse (if used): Frequency
- AC and Start & stop parameters: Set to default.

All these parameters can still be modified as per normal for the actual welding.

Weld Assist gives you a recommendation for these:

- Shielding gas flow: "Argon" + l/min and "Helium" + l/min
- Electrode: Diameter
- Filler (if used): Material and diameter
- Number of passes: Number and/or visualization
- Travel speed: mm/min.

Using Weld Assist with MMA welding

1. Go to the **Weld Assist** view and select 'Start' with the control knob button.

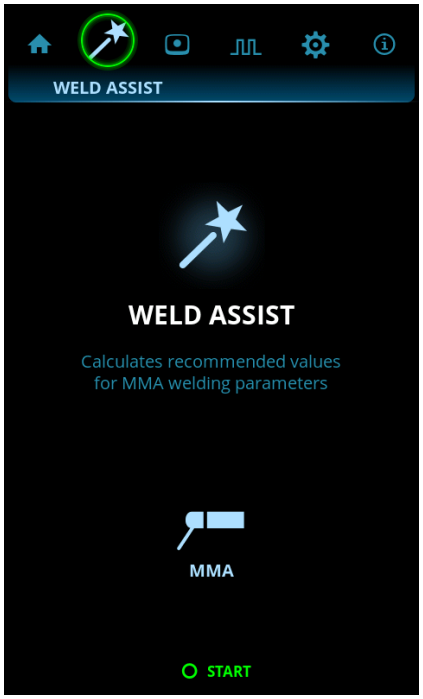

2. Select:
   >> The electrode type: Fe-Basic / Fe-Rutile / High Eff. / Ss (stainless steel)/Inox.
   >> The electrode diameter (1.6 ... 6 mm).
   >> The welding joint type: butt joint / corner joint / lap joint / fillet joint / tube joint / tube+plate joint.

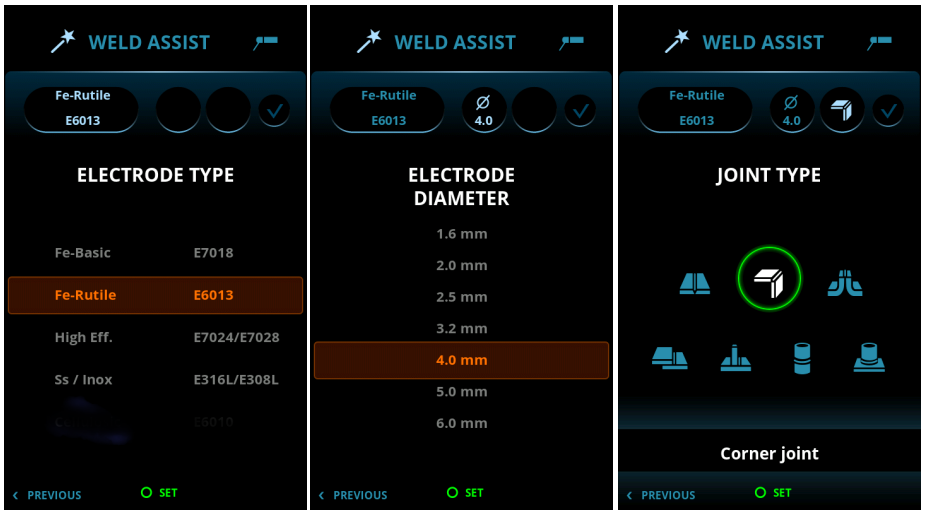

3. Confirm the Weld Assist's recommendation for welding settings by selecting 'Apply'.

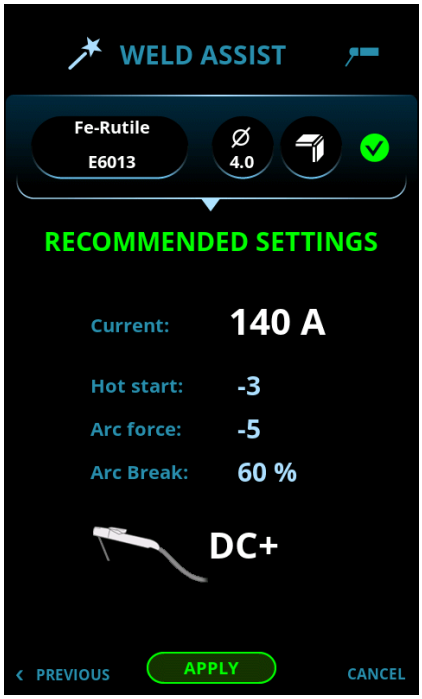

Weld Assist automatically sets the following parameters for you:

- Current: Depends on the machine used
- Hot start
- Arc force
- DC+ indicates polarity (in this case the electrode holder is connected to the positive (+) DIX connector).

All these parameters can still be modified as per normal for the actual welding.

3.2.3 MEMORY CHANNELS VIEW

Memory channel is a place to store predefined parameter settings for future use. A welding machine can include a number of preset and user-defined channels.

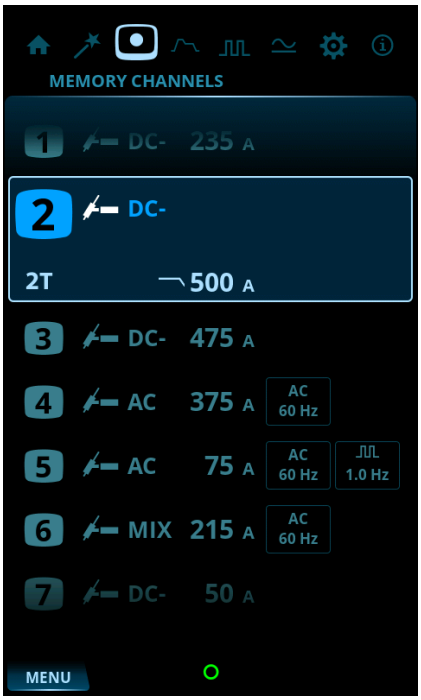

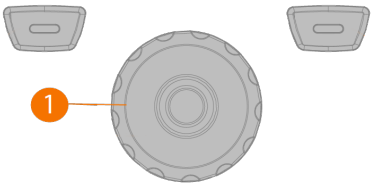

To browse through channels and select channels:

1. Go to the **Memory channels** view.
2. Turn the control knob (1) to switch between channels. The highlighted channel is automatically selected.

To save or delete channels:

1. Turn the control knob (1) to highlight a channel.
2. Open the channel actions menu by pressing the control knob button (1). The available actions are shown: Cancel, Save changes, Save to and Delete.
3. Select an action with the control knob (1).

3.2.4 START & STOP SEQUENCE VIEW

The parameters diagram view makes base parameter identification and setting easy. From pre-gas time to post-gas time and everything in between, you can quickly select and adjust the needed parameter value.

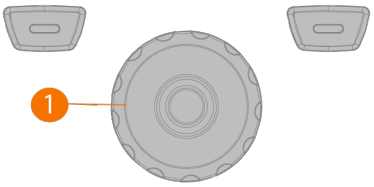

To adjust parameters:

1. Go to the **Start & stop** sequence view.
2. Turn the control knob (1) to browse through the parameters.
3. Select a parameter for adjusting by pressing the control knob button (1).
4. Adjust the parameter by turning the control knob (1).
5. Close the parameter setting by pressing the control knob (1).

Adjustable parameters in all welding modes:

Parameter	Value	Description
Trigger logic	2T / 4T / 4T LOG / 4T LOG + Minilog (Default = 2T)	Welding torches have two alternative operation modes: 2T and 4T. They differ in the way how the trigger operates. In 2T mode you hold the trigger down while welding, whereas in 4T mode you press and release the trigger to start or to stop welding and to use special trigger functions, such as Minilog.

Parameter	Value	Description
Welding mode	Continuous / Spot / MicroTack	Continuous: Normal TIG welding which doesn't have any pause times. Spot welding: TIG welding function, which automatically produces a weld of predefined duration. Parameters are preset by the user. This function is used for attaching two pieces of materials with tack welds, for example joining thin sheets with low heat input. MicroTack welding: TIG welding function, which optimizes the spot welding characteristics. Used for tack welding of thin sheets or materials of different thicknesses. Allows fast and easy creation of clean tack welds with minimum heat input.
Welding current	Default = 50 A	
Ignition mode	HF (High frequency) / Lift TIG ignition	The way in which the welding arc is ignited. In TIG welding, two ignition modes are available: High Frequency (HF) ignition and Lift TIG ignition. The HF ignition uses a voltage pulse to initiate the arc, and the Lift TIG ignition needs a physical contact between the electrode and the work piece.

Adjustable parameters in continuous welding:

Parameter	Value	Description
Pre gas	0.0 s ... 10.0 s, Auto, step 0.1 s (Default = Auto)	Welding function that starts the shielding gas flow before the arc ignites. This ensures that the metal does not come into contact with air at the start of the weld. Time value is preset by the user. Used for all metals, but especially for stainless steel, aluminum and titanium.
Search arc	OFF / 5 % ... 90 %, step 1 % (Default = OFF)	Welding function that allows using a brief low current period at the start of the weld. This enables precise start of welding. The parameters are preset by the user.
Upslope	OFF / 0.1 s ... 5.0 s, step 0.1 s (Default = OFF)	Welding function that determines the time, during which the welding current gradually increases to desired welding current level at the start of the weld. The value for the upslope time is preset by the user. The value zero means the function is off.

Parameter	Value	Description
Hot start level	-80 % ... 100 %, step 1 % (Default = OFF, 0 %)	Hot start: Welding function that uses higher welding current at the start of the weld. After the Hot start period the current drops to normal welding current level. The values for Hot start current level and its duration are preset manually. This facilitates the start of the weld especially with aluminum materials.
Hot start time	0.1 s ... 9.9 s, step 0.1 s (Default = 1.2 s)	This is not available with 4T trigger logic.
Minilog level	-99 % ... 125 %, step 1 % (Default = OFF, 0 %)	Minilog: TIG welding function, which allows using the torch switch to change between the welding current and Minilog current. Parameters are preset by the user. Welding over tack welds is one application, and it also functions as a "pause current" when the welding position changes for example.
Downslope	OFF / 0.1 s ... 15.0 s, step 0.1 s (Default = 0.1 s)	Welding function that determines the time, during which the welding current gradually decreases to the end current level. The value for the downslope time is preset by the user. The value zero means the function is off.
Tail arc	OFF / 5 % ... 90 % (Default = OFF)	Welding function that allows using a brief low current period at the end of the weld. This reduces welding defects caused by end cratering. The parameters are preset by the user. The value zero means the function is off.
Post gas	0.0 s ... 30.0 s / Auto, step 0.1 s	Welding function that continues the shielding gas flow after the arc has extinguished. This ensures that the hot weld does not come into contact with air after the arc is extinguished, protecting the weld and also the electrode. Used for all metals. Especially stainless steel and titanium require longer post gas times.

Adjustable parameters in spot welding:

Parameter	Value	Description
Pre gas	0.0 s ... 10.0 s, Auto, step 0.1 s (Default = Auto)	Welding function that starts the shielding gas flow before the arc ignites. This ensures that the metal does not come into contact with air at the start of the weld. Time value is preset by the user. Used for all metals, but especially for stainless steel, aluminum and titanium.
Upslope	OFF / 0.1 s ... 5.0 s, step 0.1 s (Default = OFF)	Welding function that determines the time, during which the welding current gradually increases to desired welding current level at the start of the weld. The value for the upslope time is preset by the user. The value zero means the function is off.
Spot time	0 s ... 10 s, step 0.1 s (Default = 2.0 s) 10 s ... 150.0 s, step 1.0 s	Spot welding: TIG welding function, which automatically produces a weld of predefined duration. Parameters are preset by the user. This function is used for attaching two pieces of materials with tack welds, for example joining thin sheets with low heat input.
Downslope	OFF / 0.1 s ... 15.0 s, step 0.1 s (Default = 0.1 s)	Welding function that determines the time, during which the welding current gradually decreases to the end current level. The value for the downslope time is preset by the user. The value zero means the function is off.
Post gas	0.0 s ... 30.0 s / Auto, step 0.1 s (Default = Auto)	Welding function that continues the shielding gas flow after the arc has extinguished. This ensures that the hot weld does not come into contact with air after the arc is extinguished, protecting the weld and also the electrode. Used for all metals. Especially stainless steel and titanium require longer post gas times.

Adjustable parameters in MicroTack welding:

Parameter	Value	Description
Pre gas	0.0 s ... 10.0 s, Auto, 0.1 s step (Default = Auto)	Welding function that starts the shielding gas flow before the arc ignites. This ensures that the metal does not come into contact with air at the start of the weld. Time value is preset by the user. Used for all metals, but especially for stainless steel, aluminum and titanium.

Parameter	Value	Description
MicroTack spot count	1 ... 5 / Continuous, step 1 (Default = 1)	If Lift TIG is used, MicroTack graph shows only 1 spot and the spot count parameter is not visible.
MicroTack spot time	1 ms ... 200 ms, step 1 ms (Default = 10 ms)	
MicroTack pause time	10.0 ms ... 100 ms, step 1 ms (Default = 50 ms) 0.2 s ... 2.0 s, step 0.1 s	This is not visible in the settings if the MicroTack pulse count is only 1.
Post gas	0.0 s ... 30.0 s / Auto, step 0.1 s (Default = Auto)	Welding function that continues the shielding gas flow after the arc has extinguished. This ensures that the hot weld does not come into contact with air after the arc is extinguished, protecting the weld and also the electrode. Used for all metals. Especially stainless steel and titanium require longer post gas times.

"Welding processes and features" on page 77

3.2.5 PULSE VIEW

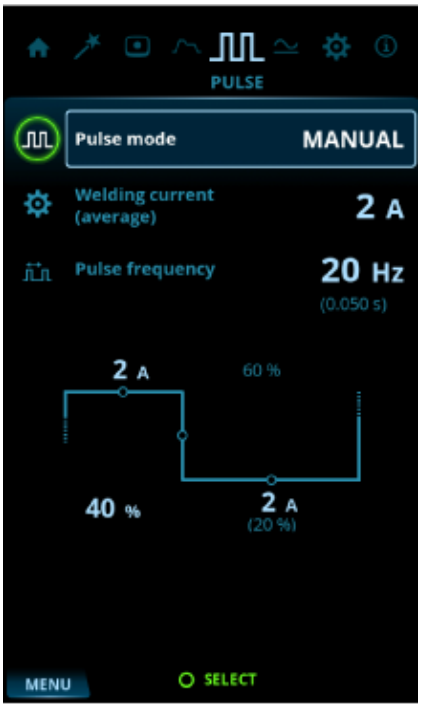

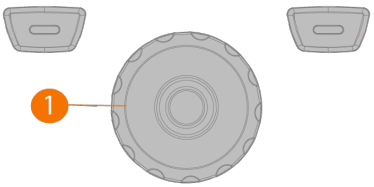

To adjust parameters:

1. Go to the **Pulse** view.
2. Turn the control knob (1) to browse through the parameters.
3. Select a parameter for adjustment by pressing the control knob button (1).
4. Adjust the parameter by turning the control knob (1).
5. Close the parameter setting by pressing the control knob button (1).

Adjustable parameters:

Parameter	Value	Description
Pulse mode	OFF / Auto / Manual / Double	Pulse TIG: TIG welding process, where the welding current changes between two current levels: base current and pulse current. Parameters can be set either manually or automatically. Used for optimizing the arc characteristics for desired welding applications. In DC current mode: - When OFF is selected, pulse settings are not visible. - When Auto is selected, pulse settings are visible but not adjustable. - When Manual is selected, pulse settings are visible and adjustable. In AC current mode, only OFF or Manual can be selected.
Average current	Min = Current limit min Max = Machine-specific	These values depend also on other pulse parameters. Maximum average current is also limited by the machine specifications.
Pulse frequency	0.2 Hz ... 10 Hz, step 0.1 Hz, 10 Hz ... 300 Hz, step 1 Hz	Determines how many pulse cycles are created per second (Hz). When AC current mode is used, the maximum pulse frequency is 20 Hz. When double pulse mode is used, the maximum pulse frequency is 30 Hz.

Pulse current	10 A ... 300 A, step 1 A	The higher current level of the pulse cycle. In TIG welding, its main task is to create weld pool or increase the heat of the weld pool. These values depend also on other pulse parameters. Maximum pulse current is also limited by the machine specifications.
Pulse ratio	10 % ... 70 %, step 1 %	Determines how big part of the whole pulse cycle time is spent on pulse current.
Pulse base current	10 % ... 70 %, step 1 %	The lower current level of the pulse cycle. In TIG welding, its main tasks are to cool down the weld pool and to maintain the arc.

Adjusting one pulse parameter value has an effect on the other values as well.

"Welding processes and features" on page 77

3.2.6 CURRENT MODE VIEW

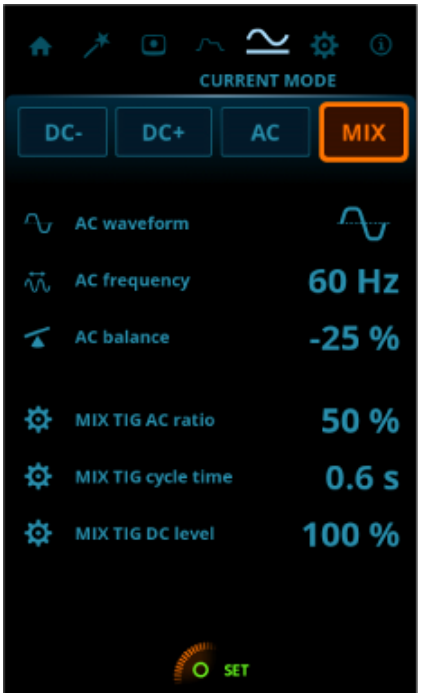

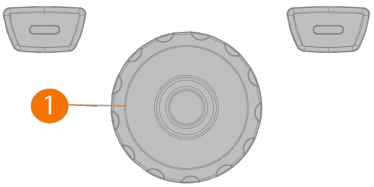

To adjust parameters:

1. Go to the **Current mode** view.
2. Turn the control knob (1) to browse through the parameters.
3. Select a parameter to be adjusted by pressing the control knob (1).
4. Adjust the parameter by turning the control knob (1).
5. Close the parameter setting by pressing the control knob (1).

Adjustable parameters:

Parameter	Value	Description
Current mode	DC- / DC+ / AC / MIX	DC TIG: Direct current TIG welding process, where the polarity of the electrode is either positive or negative throughout the welding process. Negative polarity (DC-) allows high penetration, whereas positive polarity (DC+) is used only in special applications. AC TIG: Alternating current TIG welding process, where the polarity of the electrode alternates rapidly between positive and negative. Used especially in aluminum welding. MIX TIG: TIG welding function, where AC TIG and DC TIG processes alternate in predefined manner. Parameters are preset by the user according to welding application. Used especially for optimizing welding of aluminum materials of dissimilar thicknesses.
AC Waveform	Square / Optima / Sine (Default = Optima)	Function to change the wave form of the alternating current in AC TIG welding. Three options are available: sine, square and Optima. The wave form affects the shape of weld bead, penetration of the weld and the noise of the welding process. Select the one that suits the application.
AC Frequency	30 Hz ... 200 Hz, step 1.0 Hz	Function to change the frequency of the alternating current in AC TIG welding. This setting adjusts the number of cycles per second. Used for changing the frequency of the welding current to best match the welder's preference and application.
AC+ / AC- balance	Min/Max = -60 % ... 0 %, step 1 % (Default = -25%)	Function to adjust the positive and negative current cycles in AC TIG welding. Low percentage means that, on average, the welding current is more on the negative side, and high percentage that, on average, the welding current is more on the positive side.

Parameter	Value	Description
MIX TIG AC ratio	Min/Max = 10 % ... 90 %, step 1 % (Default = 50 %)	The share of the AC TIG process in a MIX TIG welding cycle.
MIX TIG cycle time	Min/Max = 0.1 s ... 1.0 s, step 0.1 s (Default = 0.6 s)	The duration of one MIX TIG welding cycle.
MIX TIG DC level	Min/Max = 50 % ... 150 %, step 1 % (Default = 100 %)	The DC current level in a MIX TIG welding cycle.

"Welding processes and features" on page 77

3.2.7 SETTINGS VIEW

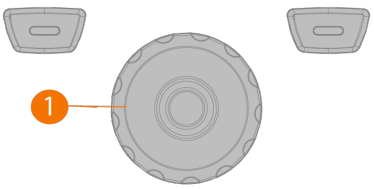

To adjust settings:

1. Go to the **Settings** view.
2. Turn the control knob (1) to browse through the settings groups and parameters.
3. Select a parameter to be adjusted or changed by pressing the control knob button (1).
4. Adjust or change the setting by turning the control knob (1).
5. Close the parameter setting by pressing the control knob button (1).

Some of the settings are e.g. current mode and welding process specific and are visible or not visible in the settings menu accordingly.

Common welding settings:

Parameter	Value	Description
Welding process	TIG / MMA / Cleaning / Polishing (Default = TIG)	Selecting a welding process changes automatically to the last active channel for the selected process.
Current limit min	TIG: 2 A / MMA: 8 A, step 1 A *	
Current limit max	TIG: power source's nominal value / MMA: power source's max. MMA current, step 1 A *	
Remote control mode	OFF / Remote / Torch (Default = OFF)	When a remote control or a torch remote control is selected, the welding current adjustment on the control panel is disabled.
Remote control min	Min = “Current limit min”, Max = “Current limit max”	
Remote control max	Min = “Current limit min”, Max = “Current limit max”	
Remote mode	Current / Channel (Default = Current)	Select whether the remote control adjusts welding current or memory channels.
Wireless remote	Pairing starts automatically when selected	New pairing information replaces the old information. Pairing status is shown as the settings value.

TIG settings:

Parameter	Value	Description
AC electrode type	Default / Green	AC electrode type. If you are using the green AC electrode type, select Green. The default applies to all other AC electrode types.
Balance limit min	-99 ... 0, step 1 (Default = -60)	
Balance limit max	0 ... +20, step 1 (Default = 0)	
Lift TIG current	5 A ... 40 A / Auto, step 1 A (Default = Auto = 10 A)	Contact current in the beginning of Lift TIG ignition.
HF spark force	50 % ... 110 %, step 1 % (Default = 100 %)	Adjusts the voltage of the high frequency spark used in ignition.

Parameter	Value	Description
DC Positive ignition current	30 % ... 150 % / Auto, step 1 % (Default = Auto)	Adjusts the current level of the positive ignition sequence in DC current mode.
DC Positive ignition time	0 ms ... 200 ms / Auto, step 10 ms (Default = Auto)	Adjusts the length of the positive ignition sequence in DC current mode.
DC Negative ignition current	100 % ... 300 % / Auto, Step 1 % (Default = Auto)	Adjusts the current level of the negative ignition sequence in DC current mode.
DC Negative ignition time	0 ms ... 950 ms / Auto, step 10 ms (Default = Auto)	Adjusts the length of the negative ignition sequence in DC current mode.
AC Positive ignition current	30 % ... 150 % / Auto, step 1 % (Default = Auto)	Adjusts the current level of the positive ignition sequence in AC current mode.
AC Positive ignition time	0 ms ... 200 ms / Auto, step 10 ms (Default = Auto)	Adjusts the length of the positive ignition sequence in AC current mode.
AC Negative ignition current	100 % ... 300 % / Auto, Step 1 % (Default = Auto)	Adjusts the current level of the negative ignition sequence in AC current mode.
AC Negative ignition time	0 ms ... 950 ms / Auto, step 10 ms (Default = Auto)	Adjusts the length of the negative ignition sequence in AC current mode.
Slight upslope	OFF / ON (Default = OFF)	This is a function that automatically creates a slight upslope to prevent electrode wearing caused by sudden current rises with high welding currents. This function has an effect only when the welding current is 100 A or more.
Startup level	5 % ... 40 %, step 1 % (Default = 25 %)	The point of welding current where the upslope begins.
Downslope cut level	5 % ... 40 %, step 1 % (Default = 10 %)	The point of welding current where the downslope ends.
2T downslope cut	OFF / ON (Default = OFF)	This is a function that allows the user to end the current downslope ramp with a quick press of the torch switch.
Nonlinear downslope	0 % ... 50 %, step 1 % (Default = 0 %)	Determines a point to which current goes down as fast as possible and then starts normal downslope.
Current freezing	OFF / ON (Default = OFF)	Welding current can be freezed to a certain level during downslope by pressing the trigger.

Parameter	Value	Description
TIG antifreeze	OFF / ON (Default = OFF)	A function which automatically decreases the welding current significantly when electrode is touching the workpiece. Can be used for example to avoid unwanted dilution from electrode to welded metal.
AC phase swap current	5 A ... 20 A / Auto	Changes the welding current point where crossing the zero begins. Affects only AC TIG.

MMA settings:

Parameter	Value	Description
Welding current	Min/Max = Normal welding current limits	
Hot start	-10 ... +10, step 1 (Default = 0)	Welding function that uses higher welding current at the start of the weld. After the Hot start period the current drops to normal welding current level. The values for Hot start current level and its duration are preset manually. This facilitates the start of the weld especially with aluminum materials.
Arc force	-10 ... +10, step 1 (Default = 0)	Adjusts short circuit dynamics (roughness) of MMA welding by changing, for example, current levels.
MMA antifreeze	OFF / ON (Default = ON)	A function which automatically decreases the welding current significantly when electrode is touching the workpiece. Can be used for avoiding MMA electrode getting too hot when it's in contact with the workpiece.
VRD mode	OFF / ON (Default = OFF)	This setting can be locked so that the user cannot change it. In the equipment models where the VRD mode is locked permanently to ON (e.g. AU model), the VRD option is still visible in the settings, but it cannot be changed.

System settings:

Parameter	Value	Description
Water cooler	OFF / Auto / ON (Default = Auto)	
Cooler flow sensor	OFF / ON (Default = ON)	
Brightness	10 % ... 100 %, step 1 % (Default = 100 %)	

Parameter	Value	Description
Weld data time	OFF / 1 s ... 10 s, step 1 s (Default = 5 s)	
Screen saver time	OFF / 1 min ... 120 min, step 1 min (Default = 5 min)	
Display off time	OFF / 1 min ... 120 min (Default = 5 min)	
Screen saver image	Default = Kemppi logo	An alternative screen saver image can be used. For more information, refer to "Screen saver" on page 55.
Show Weld Assist	ON / OFF (Default = ON)	Weld Assist: A wizard-like utility for easy selection of welding parameters. The utility walks the user step-by-step through the selection of required parameters, presenting the selections in an easily understandable way.
Date	Date setting (DD/MM/YYYY)	
Time (24h)	Time setting (HH:MM)	
Language	Language setting	

Special functions:

Parameter	Value	Note
Gas test	Gas test time: 0 s ... 60 s, step 1 s (Default = 20 s)	Activating this starts the gas test with default time. Time can be changed by turning the control knob. Gas test can be stopped by pressing the control knob again.
Demagnetization	Cancel / Start (Default = Cancel)	This activates the demagnetization of the work piece. For more information, refer to "Demagnetizing workpiece" on page 62.
Factory reset...	Cancel / Start (Default = Cancel)	This activates the factory reset to restore factory settings on the device. Once the factory reset is complete, the power source must be restarted manually.

* Current range adjustable by welder in TIG welding:

- 2 A ... 505 A (400 V), step 1 A
  >> Default = Nominal value of the power source.
- 2 A ... 455 A (220 V), step 1 A
  >> Default = Nominal value of the power source.

* Current range adjustable by welder in MMA welding:

- 8 A ... 405 A (400 V), step 1 A
  >> Default = MMA maximum current of the power source.
- 8 A ... 385 A (220 V), step 1 A
  >> Default = MMA maximum current of the power source.

"Welding processes and features" on page 77

3.2.8 INFO VIEW

In the **Info** view you can see information about the equipment usage as well as software version for example.

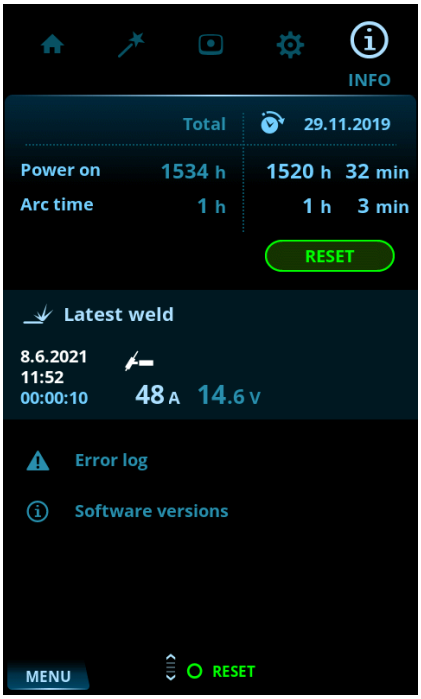

Included in the Info view:

- Usage counters and Reset button
- Latest weld
- Error status and error log
- Power source and control panel software versions.

3.2.9 SCREEN SAVER

The screen saver image shown during start-up and when the control panel has been idle for a predefined time can be changed using the screen saver tool at kemp.cc/screensaver. To make the change, you'll need the image file you are planning to use and a USB memory stick.

Tools needed:

T20

1. On a web browser, go to kemp.cc/screensaver.
2. Following the on-screen instructions, upload, edit and download the new screen saver image onto a USB memory stick.
3. Detach the control panel from the power source. Refer to "Replacing control panel" on page 25 for more information.

Do not disconnect the control panel cable. The power source and control panel must be turned on.

4. Connect the USB memory stick to the USB connector on the rear side of the control panel. The control panel detects your USB memory stick automatically and shows a list of available images.

Always connect and disconnect the USB device in a straight angle to avoid any additional stress to the USB connector.

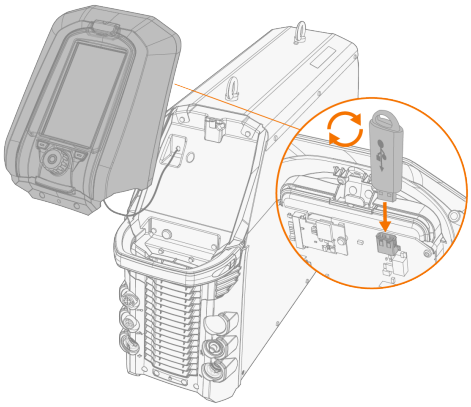

5. Following the on-screen instructions, and using the control panel controls, select the image on the USB memory stick you want to use as a screen saver.
6. Remove the USB memory stick and install the control panel back in place. Refer to "Replacing control panel" on page 25 for more information.

To delete a custom screen saver image from the control panel memory, or to use the Kemppi logo instead, go to "Settings view" on page 49.

3.3 OPERATING COOLING UNIT

1. Ensure there is cooling liquid in the tank and that the welding torch is connected.
2. Press and briefly hold the cooling liquid circulation button on the cooling unit's front. This activates a pump motor which pumps the cooling liquid into the hoses and to the welding torch.

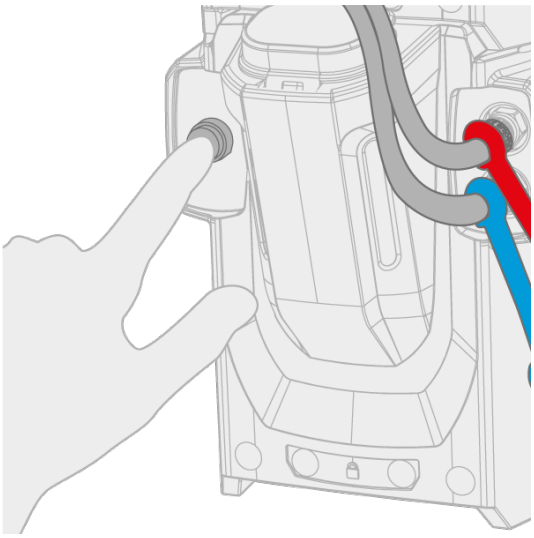

3. Observe the cooling system throughout the cooling liquid circulation process.

The cooling liquid circulation can be stopped at any time by pressing the cooling liquid circulation button again. If the system does not fill up during 1 minute after the button has been released, the automatic filling stops.

3.4 USING REMOTE CONTROL HR43/HR45/FR43/FR45

For installing remote control, refer to "Installing remote control (optional)" on page 20.

Hand remote control:

To adjust the welding current, turn the knob on the remote control.

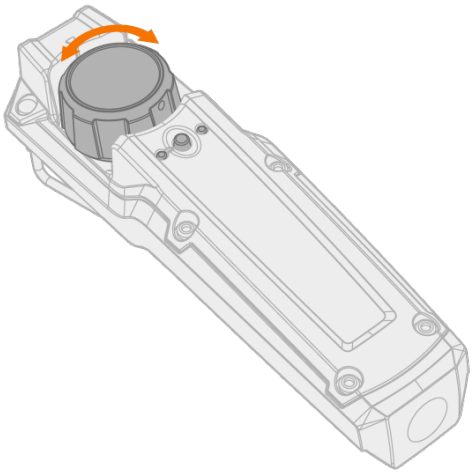

Tip: The remote control comes equipped with a handy clip for hanging the remote onto your belt.

Foot pedal remote control:

To adjust the welding current, press the pedal.

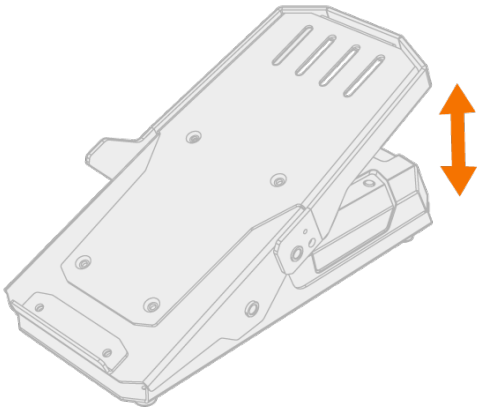

Tip: To shift the foot pedal position on the floor, use the foot pedal handle.

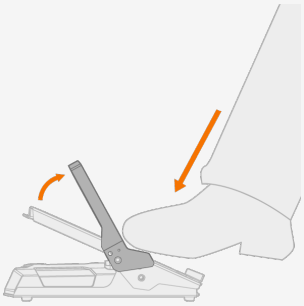

3.5 USING REMOTE CONTROL HR55

When connected, the HR55 remote control is automatically in use.

With the optional HR55 remote control, you can select memory channels and adjust current.

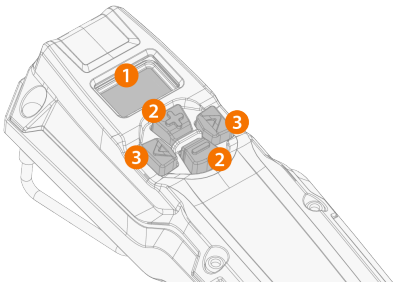

1. LCD display
   >> Displays the adjusted parameter
   >> Notifies if there is an error ("Err") in the welding system or if demagnetization ("dEn") is in progress.
2. Plus/minus (+/-) buttons
   >> Changes the parameter value.
3. Left/right arrow buttons
   >> Changes between views.

Remote control display items

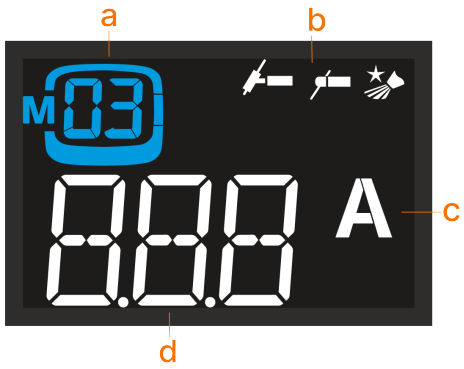

a. Selected memory channel information
b. Process (TIG/MMA/Cleaning/Polishing) is indicated with a symbol
c. Adjusted parameter unit
d. Adjusted parameter value (or error indicator)

When the parameter is adjusted with the remote and the parameter value doesn't reflect the one saved on the selected memory channel anymore, this is indicated on the display by showing only the memory channel number without the channel box around it (TIG, cleaning and polishing only):

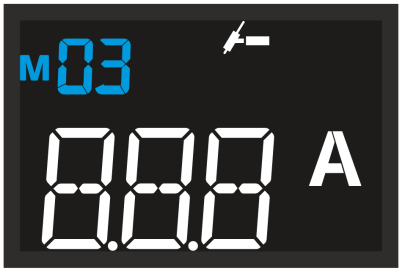

Remote control views and operation

Change between the views by pressing the left/right arrow buttons.

- **Memory channel view (TIG, cleaning and polishing only):** The memory channel is changed by pressing the +/- buttons. Long press of a +/- button scrolls the parameter values faster.
- **Process selection view:** This allows selecting between TIG, MMA, cleaning and polishing processes.
- **Welding power view:** Current is adjusted by pressing the +/- buttons. Long press of a +/- button scrolls the parameter values faster.

Long press of the left arrow button saves the adjusted parameter on the currently selected channel.

3.6 CLEANING AND POLISHING WELD

Cleaning and polishing processes are used to restore the corrosion protection of stainless steel welds. These processes involve removing contaminants and correcting discoloration on the weld seams.

The cleaning process uses AC current and is more efficient of the two. The polishing process uses DC- current.

The 2T and 4T trigger logic functions as well as memory channels are available with the cleaning and polishing processes.

Pay attention to your own safety and the safety of others in the work environment.

Ensure proper ventilation and use personal respiratory protection.

Wear suitable protective clothing, including eye, face and hand protection. Use protective gloves that are specifically designed for handling chemicals, such as phosphoric acids, and that comply with the EN ISO 374-1:2016 standard. Also, follow the safety guidelines and recommendations provided by the manufacturer of the chemicals you use.

Always check before use that earth return lead/clamp and mains cable are in serviceable condition. Ensure that the connectors are correctly fastened.

Choose the cleaning liquid (e.g., 10...60 % phosphoric acid) and the neutralization liquid (e.g., water) based on the application.

To clean/polish a weld:

1. Attach Kemppi's MAX WeldClean cleaning tool to a TIG welding torch body (for more information, refer to Kemppi Userdoc).
2. Ensure that the earth return cable is connected to the power source and work piece.
3. Select the cleaning or polishing process (refer to "Settings view" on page 49).
4. Adjust the current by turning the control knob or by using a remote control.

   The default current for cleaning and polishing is 25 A. With the L-size cleaning tool, a good starting point for finding a suitable current is 50 A. In general, the current is suitable when the cleaning is relatively fast and the formation of fumes is low.
5. Dip the brush into the cleaning liquid. Ensure that both the brush and the surface to be cleaned are sufficiently moist throughout the cleaning process.
6. Apply the brush to the work piece and ignite the current by pressing the ON/OFF switch on the torch handle.
7. Choose the cleaning technique based on the application. However, always ensure that the brush does not come off the work piece during cleaning.

   If the brush comes off the work piece, an automatic power cutoff is activated to prevent burn marks. If you apply the brush to the workpiece again within 10 seconds, the power is automatically restored.
8. Turn off the current and lift the brush away from the work piece.
9. Finally, neutralize the cleaned area with a neutralization liquid and wipe dry.

Wash and rinse the cleaning equipment thoroughly after use to avoid acid damage and to keep the equipment in good condition for future use.

3.7 DEMAGNETIZING WORKPIECE

Demagnetization is a process of neutralizing residual magnetism in metal components to ensure stable arc behavior.

The demagnetization cable is available as an optional accessory (refer to Kemppi.com).

The demagnetization process may involve strong, fluctuating electrical fields and electromagnetic field (EMF) exposure.

Do not touch the workpiece, demagnetization cables, or connections while demagnetization is active, and maintain as much distance as practical from the coil.

Ensure all personal metal items (rings, watches, keys) are removed.

Keep all unnecessary personnel at a safe distance.

Confirm that personnel with pacemakers or implanted medical devices are clear from the area.

Remove any electronic and magnetic storage devices (credit cards, mobile phones, external drives) from the vicinity.

1. In the control panel, go to **Settings** / **Special functions** / **Demagnetization**. Follow the on-screen instructions.
2. Wrap the demagnetization cable around the workpiece (as shown on the screen).
3. Connect the demagnetization cable to the DIX plus (+) and minus (-) connectors of the power source (refer to "Equipment description" on page 7).

   >> If the workpiece is large, you can connect demagnetization cables together using a separate adapter.
4. Select **Start**.
5. When the demagnetization has been completed, select **Close**.

3.8 TROUBLESHOOTING

The problems and the possible causes listed are not definitive, but suggest some typical situations that may turn up during normal use of the welding system. For further information and assistance, contact your nearest Kemppi service workshop.

If you have received an error code, refer also to "Error codes" on the next page.

General:

The welding system does not power up

- Check that the mains cable is plugged in properly.
- Check that the mains switch of the power source is at the ON position.
- Check that the mains power distribution is on.
- Check the mains fuse and/or the circuit breaker.
- Check that the earth return cable is connected.

The welding system stops working

- The torch may have overheated. Wait for it to cool down.
- Check that none of the cables is loose.
- The power source may have overheated. Wait for it to cool down and see that the cooling fans work properly and the air flow is unobstructed.

Welding torch:

The torch overheats

- Make sure the torch body is properly connected.
- Make sure that the welding parameters are within the range of the welding torch. If different torch components have separate limits for the maximum current; the lower one of these is the maximum current that can be used.
- Make sure the coolant circulation is working normally (see the coolant circulation warning LED on the power source).
- Measure the coolant circulation speed: detach the coolant output hose from the cooler unit when the power source is on, and let the coolant run into a measurement cup. The circulation must be at least 0.5 l/min.
- Make sure you are using original Kemppi consumable and spare parts. Incorrect spare part materials may also cause overheating.
- Make sure the connectors are clean, undamaged and properly fastened.

Weld quality:

Dirty and/or poor weld quality

- Check that the shielding gas has not run out.
- Check that the shielding gas flow is unobstructed.
- Check that the gas type is correct for the application.
- Check the polarity of the torch/electrode.
- Check that the welding procedure is correct for the application.
- Check that the filler material is correct type/diameter for the application and clean
- Check that the electrode is correct size/type and correctly shaped for the application
- Check that the base material is clean
- Check that the groove type is correct for the application.

Tip: For checking the correct welding settings, you can also use Weld Assist.

Varying welding performance

- Check that the welding torch is physically intact and the nozzle is clear of any obstructions.
- Check that the welding torch is not overheating.
- Check that the earth return clamp is properly attached to a clean surface of the workpiece.

3.8.1 ERROR CODES

Error code	Error description	Possible reason	Proposed action
1	Power source not calibrated	Power source calibration has been lost.	Restart the power source. If problem persists, contact Kemppi service. Note: The equipment operation is limited when this error occurs.
2	Too low mains voltage	Voltage in mains network is too low.	Restart the power source. If problem persists, contact Kemppi service.
3	Too high mains voltage	Voltage in mains network is too high.	Restart the power source. If problem persists, contact Kemppi service.
4	Power source is overheated	Too long welding session with high power.	Do not shut down, let the fans cool the machine. If fans are not running, contact Kemppi service.
17	Phase is missing from mains supply	One or more phases are missing from the mains supply.	Check the mains cable and its connectors. Check the voltage of mains supply.
20	Power source cooling failure	Cooling capacity is reduced in the power source.	Clean the filters and clear any dirt from the cooling channel. Check that the cooling fans are running. If not, contact Kemppi service.
24	Cooling liquid overheated	Too long welding session with high power or high ambient temperature.	Do not turn off the cooler. Let the liquid circulate until the fans cool it down. If fans are not running, contact Kemppi service.
26	Cooling liquid not circulating	No cooling liquid or circulation is blocked.	Check the liquid level in the cooler. Check hoses and connectors for blockage.
27	Cooler not found	Cooling is turned on in the settings menu, but cooler is not connected to power source or cabling is faulty.	Check the cooler connections. Ensure that the cooling is turned off in the settings menu, if the cooler is not in use.
34	Unknown welding load	An unknown load connected to DIX connectors.	Remove any unintended resistive load connected to the welding equipment and restart the power source.
35	Too high mains current	Current drawn from the mains is too high.	Reduce welding power.
36	DC-link undervoltage	DC-link voltage is too low.	Check the mains voltage and/or the supply cable.
37	DC-link overvoltage	DC-link voltage is too high.	Check the mains voltage.
38	Mains voltage too high or too low	Mains voltage is too high or too low.	Check the mains voltage and/or the supply cable.
40	VRD error	Open circuit voltage exceeds the VRD limit.	Restart the power source. If problem persists, contact Kemppi service.

Error code	Error description	Possible reason	Proposed action
80	Torch cooling required	Water cooled torch is connected but the cooler is turned off.	Turn the cooler on in the settings menu or change the torch to an air cooled model.
81	Welding program data missing	Welding program data has been lost.	Restart the power source. If problem persists, contact Kemppi service.
244	Internal memory failure	Initialization failed.	Restart welding system. If problem persists, contact Kemppi service.
250	Internal memory failure	Memory communication failed.	Restart welding system. If problem persists, contact Kemppi service.

4. MAINTENANCE

4.1 DAILY, PERIODIC AND ANNUAL MAINTENANCE

When considering and planning routine maintenance, consider the operating frequency of the welding system and the working environment.

Correct operation of the welding machine, regular maintenance, and the use of original Kemppi spare parts and consumables help you avoid unnecessary downtime and equipment failure, while also maximizing the equipment's service life.

Use pre-mixed coolant solution in the cooling unit. The mixing ratio should be 20...50% as standard. Use only ethylene or propylene glycol mixture intended for welding cooling systems, for example Kemppi cooling liquid. Do not add water to the pre-mixed coolant solution. Do not use automotive cooling solutions or ethanol-based mixtures.

For repairs, find your closest Kemppi service workshop at www.kemppi.com or contact your dealer.

Only an authorized electrician is allowed to carry out electrical work.

Only qualified service personnel is allowed to carry out periodic and annual maintenance.

Disconnect the power source from the mains before handling electrical cables and connectors.

Do not use pressure washing devices.

Where applicable, use the correct tension torque when fastening loose parts.

Daily maintenance

Welding equipment's daily maintenance:

- Check that all covers and components are intact.
- Check all the cables, hoses and connectors. Do not use them if they are damaged.
- Ensure that the connectors are correctly fastened. Loose connectors can impair welding performance and damage connectors.

Cooling unit's daily maintenance (in addition):

- Check the cooling liquid level. Add cooling liquid if needed. Note: Use the correct coolant solution (see above).
- Check the cooling unit surroundings for cooling liquid leakages. If there are signs of significant leakage, contact Kemppi service.
- Check and test the cooling liquid pump operation by circulating the cooling liquid.

Weekly maintenance

Welding equipment's weekly maintenance:

- Clean the outside parts of the units from dust and dirt, for example, with a soft brush and vacuum cleaner.
- Clean the ventilation grills. Do not use compressed air, there is a risk that the dirt will compact even more tightly into the gaps of the cooling profiles.

Periodic maintenance

Welding equipment's periodic maintenance, every 1–6 months:

- Check the electrical connectors of the equipment at least every 6 months. Clean oxidized parts and tighten loose connectors.
- Update the welding system to the latest firmware and software versions, as applicable.

Cooling unit's periodic maintenance, every 1–6 months (in addition):

- Check the cooling liquid quality at least once a month. Ensure that the liquid is clear and free of any visible impurities.
- Replace the cooling liquid every 6 months. Note: Use the correct coolant solution (see above).

Annual maintenance

The annual maintenance must be carried out by an authorized Kemppi service workshop. Kemppi service workshops complete the welding system maintenance according to your Kemppi service agreement. Find your closest service workshop at www.kemppi.com.

Welding equipment's annual maintenance program includes:

- Cleaning the equipment.
- Maintenance of the welding tools.
- Checking the connectors and switches.
- Checking all electrical connections.
- Checking the power source mains cable and plug.
- Repairing defective parts and replacing defective components.
- Maintenance test.
- Testing the operation and calibrating the performance values when needed.
- Updating the welding system to the latest firmware and software versions, and installing new welding software.
- If a cooling unit is used: Checking and cleaning the cooling liquid pump. The pump is dismantled and cleaned thoroughly, and if there has been any leakage in the pump's axle seal point, the axle seal is replaced. The axle seal is subject to wear and may need replacement periodically to maintain proper sealing.

For Kemppi welding torch maintenance, refer to your welding torch's instructions (available also at user-doc.kemppi.com).

4.2 DISPOSAL

Do not dispose of any electrical equipment with normal waste!

In observance of WEEE Directive 2012/19/EU on waste of electrical and electronic equipment and European Directive 2011/65/EU on the restriction of the use of certain hazardous substances in electrical and electronic equipment, and their implementation in accordance with national law, electrical equipment that has reached the end of its life must be collected separately and taken to an appropriate environmentally responsible recycling facility. The owner of the equipment is obliged to deliver a decommissioned unit to a regional collection center, as per the instructions of local authorities or a Kemppi representative. By applying these European Directives you improve the environment and human health.

For more information:

5. TECHNICAL DATA

Technical data:

"Power source Master T 505 ACDC" on the next page

"Cooling unit MasterTig Cooler MXL" on page 75

Additional information:

For ordering information, refer to "Ordering info" on page 83.

5.1 POWER SOURCE MASTER T 505 ACDC

Master T 505 ACDC GM

Master T 505 ACDC GM		
Feature		Value
Mains connection voltage		380...460 V ±10 %
Mains connection voltage	MV low range	220...230 V ±10 %
Mains connection phases		3~50/60 Hz
Mains connection cable type		4G, H07RN-F
Mains connection cable size		6 mm²
Rated maximum input power [S_{1max}]		21 kVA
Mains fuse		25 A
Mains fuse	@MV low range	32 A
Idle power		29 W
No-load voltage (MMA) [U_r]		50 V
No-load voltage (MMA) VRD [$U_r VRD$]		23 V
No-load voltage (MMA/TIG) [U_0]		70 ... 95 V
Open circuit voltage (MMA)		50 V
Effective supply current [I_{1eff}]		22...20 A
Effective supply current [I_{1eff}]	@MV low range	28...27 A
Maximum supply current [I_{1max}]		31...27 A
Maximum supply current [I_{1max}]	@MV low range	44...42 A
Output, duty cycle % at rated max current, TIG		40 %
Output at +40 °C, rated max current, TIG		500 A
Output at +40 °C, 60% TIG		400 A
Output at +40 °C, 100% TIG		300 A
Output, duty cycle % at rated max current, TIG	@MV low range	40 %
Output at +40 °C, rated max current, TIG	@MV low range	450 A
Output at +40 °C, 60% TIG	@MV low range	400 A
Output at +40 °C, 100% TIG	@MV low range	300 A
Output, duty cycle % at rated max current, MMA		60 %
Output at +40 °C, rated max current, MMA		400 A
Output at +40 °C, 60% MMA		400 A
Output at +40 °C, 100% MMA		300 A
Output, duty cycle % at rated max current, MMA	@MV low range	40 %
Output at +40 °C, rated max current, MMA	@MV low range	380 A
Output at +40 °C, 60% MMA	@MV low range	320 A
Output at +40 °C, 100% MMA	@MV low range	270 A

Output range, TIG welding current/voltage		5 A / 1 V ... 500 A / 37 V
Output range, MMA welding current/voltage		10 A / 10 V ... 400 A / 39 V
Output range, TIG welding current/voltage	@MV low range	5 A / 1 V ... 450 A / 32 V
Output range, MMA welding current/voltage	@MV low range	10 A / 10 V ... 380 A / 37 V
Power factor at rated maximum current	λ	0.9
Efficiency at rated maximum current	η	86 %
Minimum short-circuit power of supply network [S_{SC}]		3.4 MVA
Voltage supply for cooling unit		380...460 V
Voltage supply for cooling unit	@MV low range	220...230 V
Welding connection type		R1/4
Arc-on signal for relay		24 V / 50 mA
Arc striking voltage		11 kV
Stick electrode diameter range		1.6...7 mm
Wired communication type		Analog, Kemppi Remote-Bus
Wireless communication type		Bluetooth
Transmitter frequency and power		2400...2483.5 MHz, 10 dBm
Operating temperature range		-20...40 °C
Storage temperature range		-40...60 °C
Recommended minimum generator power [S_{gen}]		35 kVA
EMC class		A
Degree of protection		IP23
External dimensions	*L* x *W* x *H*	890 x 263 x 610 mm
Weight without accessories		57 kg
Standards		IEC 60974-1,-3,-10, GB/T 15579.1

Master T 505 ACDC GM AU (VRD locked on)

Master T 505 ACDC GM		
Feature		Value
Mains connection voltage		380...460 V ±10 %
Mains connection voltage	MV low range	220...230 V ±10 %
Mains connection phases		3~50/60 Hz
Mains connection cable type		4G, H07RN-F
Mains connection cable size		6 mm²
Rated maximum input power [S_{1max}]		21 kVA
Mains fuse		25 A
Mains fuse	@MV low range	32 A
Idle power		29 W
No-load voltage (MMA) [U_r]		23 V

No-load voltage (MMA) VRD [$U_r VRD$]		23 V
No-load voltage (MMA/TIG) [U_0]		70 ... 95 V
Open circuit voltage (MMA)		23 V
Effective supply current [I_{1eff}]		22...20 A
Effective supply current [I_{1eff}]	@MV low range	28...27 A
Maximum supply current [I_{1max}]		31...27 A
Maximum supply current [I_{1max}]	@MV low range	44...42 A
Output, duty cycle % at rated max current, TIG		40 %
Output at +40 °C, rated max current, TIG		500 A
Output at +40 °C, 60% TIG		400 A
Output at +40 °C, 100% TIG		300 A
Output, duty cycle % at rated max current, TIG	@MV low range	40 %
Output at +40 °C, rated max current, TIG	@MV low range	450 A
Output at +40 °C, 60% TIG	@MV low range	400 A
Output at +40 °C, 100% TIG	@MV low range	300 A
Output, duty cycle % at rated max current, MMA		60 %
Output at +40 °C, rated max current, MMA		400 A
Output at +40 °C, 60% MMA		400 A
Output at +40 °C, 100% MMA		300 A
Output, duty cycle % at rated max current, MMA	@MV low range	40 %
Output at +40 °C, rated max current, MMA	@MV low range	380 A
Output at +40 °C, 60% MMA	@MV low range	320 A
Output at +40 °C, 100% MMA	@MV low range	270 A
Output range, TIG welding current/voltage		5 A / 1 V ... 500 A / 37 V
Output range, MMA welding current/voltage		10 A / 10 V ... 400 A / 39 V
Output range, TIG welding current/voltage	@MV low range	5 A / 1 V ... 450 A / 32 V
Output range, MMA welding current/voltage	@MV low range	10 A / 10 V ... 380 A / 37 V
Power factor at rated maximum current	λ	0.9
Efficiency at rated maximum current	η	86 %
Minimum short-circuit power of supply network [S_{SC}]		3.4 MVA
Voltage supply for cooling unit		380...460 V
Voltage supply for cooling unit	@MV low range	220...230 V
Welding connection type		R1/4
Arc-on signal for relay		24 V / 50 mA
Stick electrode diameter range		1.6...7 mm
Wired communication type		Analog, Kemppi Remote-Bus
Wireless communication type		Bluetooth

Transmitter frequency and power		2400...2483.5 MHz, 10 dBm
Operating temperature range		-20...40 °C
Storage temperature range		-40...60 °C
Recommended minimum generator power [S_{gen}]		35 kVA
EMC class		A
Degree of protection		IP23
External dimensions	*L* x *W* x *H*	860 x 263 x 610 mm
Weight without accessories		57 kg
Standards		IEC 60974-1,-3,-10, AS 60974.1-2006, GB/T 15579.1

Wireless communication type:

- Control panel MTP35X

- Remote controls HR45, FR45

NO: These devices are not allowed to be used within a 20 km radius of the centre of Ny-Ålesund at Svalbard, Norway. This restriction applies to any 2-32 GHz transmitter operation.

5.2 COOLING UNIT MASTERTIG COOLER MXL

MasterTig Cooler MXL		
Feature		Value
Supply voltage		220...460 V
Idle state power consumption [P_{1idle}]		5 W
Maximum supply current [I_{1max}]		1 A
Cooling power at 1 l/min		1.7 kW
Maximum coolant pressure		4 Bar
Recommended coolant		Kemppi MGP 4456
Operating temperature range		-20...40 °C
Storage temperature range		-20...60 °C
EMC class		A
Degree of protection		IP23S
Tank volume		3 l
External dimensions	*L* x *W* x *H*	825 x 276 x 289 mm
Weight without accessories		25 kg
Standards		IEC 60974-2, -10

5.3 TIG GUIDE TABLES

The tables in this chapter are given only as a general guidance. The information provided is based solely on the use of WC20 (grey) electrode and Argon gas.

TIG welding (AC)

Welding current range AC		Electrode (WC20)	Gas nozzle	Gas flow rate
Min. A	Max. A	ø mm	number	l/min (Argon)
15	90	1.6	4 / 5 / 6	6...7
20	150	2.4	6 / 7	7...8
30	200	3.2	7 / 8 / 10	8...10
40	350	4.0	10 / 11	10...12
95	460	4.8	10 / 12	12...18

TIG welding (DC)

Welding current range DC		Electrode (WC20)	Gas nozzle	Gas flow rate
Min. A	Max. A	ø mm	number	l/min (Argon)
10	75	1.0	4 / 5	5...6
45	150	1.6	4 / 5 / 6	6...7
75	220	2.4	6 / 7	7...8
85	330	3.2	7 / 8 / 10	8...10
100	400	4.0	10 / 11	10...12
120	480	4.8	10 / 12	10...16

5.4 WELDING PROCESSES AND FEATURES

Master T 505

#

2T downslope cut
This is a function that allows the user to end the current downslope ramp with a quick press of the torch switch.

A

AC Balance
Function to adjust the positive and negative current cycles in AC TIG welding. Low percentage means that, on average, the welding current is more on the negative side, and high percentage that, on average, the welding current is more on the positive side.

AC Frequency
Function to change the frequency of the alternating current in AC TIG welding. This setting adjusts the number of cycles per second. Used for changing the frequency of the welding current to best match the welder's preference and application.

AC phase swap current
Changes the welding current point where crossing the zero begins. Affects only AC TIG.

AC TIG
Alternating current TIG welding process, where the polarity of the electrode alternates rapidly between positive and negative. Used especially in aluminum welding.

AC Waveform
Function to change the wave form of the alternating current in AC TIG welding. Three options are available: sine, square and Optima. The wave form affects the shape of weld bead, penetration of the weld and the noise of the welding process. Select the one that suits the application.

Arc break
Determines the point where the arc is extinguished in relation to the arc length in MMA welding. The purpose is to optimize the welding termination for each electrode type to prevent the arc from being accidentally extinguished during welding and to avoid burn marks to the weld piece when the welding is stopped.

Arc force
Adjusts short circuit dynamics (roughness) of MMA welding by changing, for example, current levels.

Arc time
Tells how long the welding arc has been on.

Auto pulse
TIG welding process, where the welding current alternates between two current levels: base current and pulse current. Only welding current needs to be adjusted and pulse parameters are preset automatically. Used for optimizing the arc characteristics for desired welding applications.

B

Balance maximum
Sets the maximum value for AC balance setting.

Balance minimum
Sets the minimum value for AC balance setting.

Base current
The lower current level of the pulse cycle. In TIG welding, its main tasks are to cool down the weld pool and to maintain the arc.

C

Continuous welding
Normal TIG welding which doesn't have any pause times.

Current freezing
Welding current can be freezed to a certain level during downslope by pressing the trigger.

D

DC TIG
Direct current TIG welding process, where the polarity of the electrode is either positive or negative throughout the welding process. Negative polarity (DC-) allows high penetration, whereas positive polarity (DC+) is used only in special applications.

Double pulse
Double pulse TIG welding can be used for example to increase travel speed or to produce welds with high visual requirements. The welding current is pulsed in two different frequencies: slow and fast. The fast frequency makes the arc more focused, and the slow frequency produces a nice fish-scale appearance to welds.

Downslope
Welding function that determines the time, during which the welding current gradually decreases to the end current level. The value for the downslope time is preset by the user. The value zero means the function is off.

Downslope cut level
The point of welding current where the downslope ends.

H

HF ignition
Ignition mode in TIG welding. In HF ignition, a press on the torch trigger produces a high voltage pulse that creates a spark to ignite the arc. The HF ignition mode must be activated in the control panel.

HF spark force
Adjusts the voltage of the high frequency spark used in ignition.

Hot start
Welding function that uses higher welding current at the start of the weld. After the Hot start period the current drops to normal welding current level. The values for Hot start current level and its duration are preset manually. This facilitates the start of the weld especially with aluminum materials.

I

Ignition current
Adjusts the current level of the negative ignition sequence (TIG).

Ignition mode
The way in which the welding arc is ignited. In TIG welding, two ignition modes are available: High Frequency (HF) ignition and Lift TIG ignition. The HF ignition uses a voltage pulse to initiate the arc, and the Lift TIG ignition needs a physical contact between the electrode and the work piece.

L

Lift TIG current
Contact current in the beginning of Lift TIG ignition.

Lift TIG ignition
Ignition mode in TIG welding. In Lift TIG ignition you briefly touch the work piece with the electrode, then press the trigger and lift the electrode to a small distance from the work piece. The Lift TIG ignition must be activated in the control panel. Also known as “Touch ignition” or “Contact ignition”.

M

Manual pulse
TIG welding process, where the welding current alternates between two current levels: base current and pulse current. Parameters are preset by the user. Used for optimizing the arc characteristics for desired welding applications.

Memory channel
Place to store predefined welding parameter settings. A welding machine can include a number of preset channels. Users can create new channels for their own welding jobs and modify or delete them. Makes parameter selection easier, and in some cases allows transferring settings from one welding machine to another.

MicroTack
TIG welding function, which optimizes the spot welding characteristics. Used for tack welding of thin sheets or materials of different thicknesses. Allows fast and easy creation of clean tack welds with minimum heat input.

Minilog
TIG welding function, which allows using the torch switch to change between the welding current and Minilog current. Parameters are preset by the user. Welding over tack welds is one application, and it also functions as a "pause current" when the welding position changes for example.

MIX TIG
TIG welding function, where AC TIG and DC TIG processes alternate in predefined manner. Parameters are preset by the user according to welding application. Used especially for optimizing

welding of aluminum materials of dissimilar thicknesses.

MMA
Manual arc welding process that uses a consumable electrode. The electrode is covered with flux material that protects the weld area from oxidation and contamination.

MMA antifreeze
A function which automatically decreases the welding current significantly when electrode is touching the workpiece. Can be used for avoiding MMA electrode getting too hot when it's in contact with the workpiece.

N

Negative ignition
The sequence of TIG ignition which is on the negative side of the current. It is typically the last part of the ignition with ACDC power sources. With DC power sources, it's the only part of the ignition with TIG.

Negative ignition current
Adjusts the current level of the negative ignition sequence (TIG).

Negative ignition time
Adjusts the length of the negative ignition sequence (TIG).

Non-linear downslope
Determines a point to which current goes down as fast as possible and then starts normal downslope.

P

Positive ignition
The sequence of TIG ignition which is on the positive side of the current. It is typically the first part of the ignition with ACDC power sources. DC power sources don't have positive ignition with TIG.

Positive ignition current
Adjusts the current level of the positive ignition sequence. Only in ACDC power sources (TIG).

Positive ignition time
Adjusts the length of the positive ignition sequence. Only in ACDC power sources (TIG).

Post gas
Welding function that continues the shielding gas flow after the arc has extinguished. This ensures that the hot weld does not come into contact with air after the arc is extinguished, protecting the weld and also the electrode. Used for all metals. Especially stainless steel and titanium require longer post gas times.

Pre gas
Welding function that starts the shielding gas flow before the arc ignites. This ensures that the metal does not come into contact with air at the start of the weld. Time value is preset by the user. Used for all metals, but especially for stainless steel, aluminum and titanium.

Pulse current
The higher current level of the pulse cycle. In TIG welding, its main task is to create weld pool or increase the heat of the weld pool.

Pulse frequency
Determines how many pulse cycles are created per second (Hz).

Pulse ratio
Determines how big part of the whole pulse cycle time is spent on pulse current.

Pulse TIG
TIG welding process, where the welding current changes between two current levels: base current and pulse current. Parameters can be set either manually or automatically. Used for optimizing the arc characteristics for desired welding applications.

S

Search arc
Welding function that allows using a brief low current period at the start of the weld. This enables precise start of welding. The parameters are preset by the user.

Slight upslope
This is a function that automatically creates a slight upslope to prevent electrode wearing caused by sudden current rises with high welding currents. This function has an effect only when the welding current is 100 A or more.

Soft start
Welding function that uses lower welding current at the start of the weld. After the Soft start period the current rises to normal welding current level. The values for Soft start current level and its duration are preset manually. Soft start is used to soften the start period of welding especially with steels.

Spot welding
TIG welding function, which automatically produces a weld of predefined duration. Parameters are preset by the user. This function is used for attaching two pieces of materials with tack welds, for example joining thin sheets with low heat input.

Startup level
The point of welding current where the upslope begins.

T

Tail arc
Welding function that allows using a brief low current period at the end of the weld. This reduces welding defects caused by end cratering. The parameters are preset by the user. The value zero means the function is off.

TIG
Manual welding process that typically uses a non-consumable tungsten electrode, a separate filler material, and an inert shielding gas to protect the weld area from oxidation and contamination during the welding process. The use of a filler material is not always mandatory in TIG welding.

TIG antifreeze
A function which automatically decreases the welding current significantly when electrode is touching the workpiece. Can be used for example to avoid unwanted dilution from electrode to welded metal.

Trigger logic
Welding torches have two alternative operation modes: 2T and 4T. They differ in the way how the trigger operates. In 2T mode you hold the trigger down while welding, whereas in 4T mode you press and release the trigger to start or to stop welding and to use special trigger functions, such as Minilog.

Trigger logic 2T
Trigger operation mode of a welding torch. When you press the trigger down in 2T mode, the shielding gas starts to flow and the arc ignites. Hold down the trigger while welding and release it when you want to stop welding.

Trigger logic 4T
Trigger operation mode of a welding torch. When you press the trigger down in 4T mode, shielding gas starts to flow but the arc won't ignite until you release the trigger. To stop welding you press the trigger down again and then release it to extinguish the arc.

U

Upslope
Welding function that determines the time, during which the welding current gradually increases to desired welding current level at the start of the weld. The value for the upslope time is preset by the user. The value zero means the function is off.

V

VRD (voltage reduction device)
A safety device used in welding equipment to reduce the open-circuit voltage to maintain below a certain voltage value. This reduces the risk of electric shock particularly in dangerous environments, such as closed or damp spaces. VRD may also be required by law in certain countries or regions.

W

Weld Assist
A wizard-like utility for easy selection of welding parameters. The utility walks the user step-by-step through the selection of required parameters, presenting the selections in an easily understandable way for a non-technical user. Available in MTP35X control panel in MasterTig product family.

5.5 ORDERING INFO

For ordering information and optional accessories, refer to Kemppi.com.

For connection options of all gun and torch models and corresponding remote controls, refer to Kemppi Userdoc at https://kemp.cc/connectivity.